Technical Report Documentation Page

1. Report No.	2. Government Accession No.	3. Recipient's Catalog No.
FHWA/TX-00/0-1832-1		

4. Title and Subtitle	5. Report Date
DEFINING SPECIAL-USE LANES: CASE STUDIES AND GUIDELINES	December 1999 Revised: October 2000
	6. Performing Organization Code
7. Author(s) Pamela Murray, Hani S. Mahmassani, Ahmed Abdelghany, and Susan Handy	8. Performing Organization Report No. 0-1832-1
9. Performing Organization Name and Address Center for Transportation Research The University of Texas at Austin 3208 Red River, Suite 200 Austin, TX 78705-2650	10. Work Unit No. (TRAIS)
	11. Contract or Grant No. 0-1832
12. Sponsoring Agency Name and Address Texas Department of Transportation Research and Technology Transfer Section/Construction Division P.O. Box 5080 Austin, TX 78763-5080	13. Type of Report and Period Covered Research Report (9/1/98 — 8/31/99)
	14. Sponsoring Agency Code

15. Supplementary Notes

Project conducted in cooperation with the U.S. Department of Transportation, Federal Highway Administration, and the Texas Department of Transportation.

16. Abstract

This research assesses the feasibility of high-occupancy vehicle (HOV) and high-occupancy vehicle/toll (HOT) facilities. In this report, current operational facilities are described and guidelines for the operation, design, agency involvement, and monitoring of freeway and arterial HOV lanes are provided. The operational effectiveness of selected configurations is assessed using a specially modified dynamic traffic assignment methodology in combination with a stochastic mode choice model. Computer simulation experiments were conducted using a corridor network from Fort Worth, Texas, as a test bed. The goal of the experiments was to examine the effect of five variables on the average trip time of a network with an HOV/HOT facility. These variables include lane usage and access point restrictions, vehicle eligibility, demand levels, price, and attractiveness of carpooling. The results of the study indicate that there is no one combination of lane usage and access points that consistently out-performs the others under different demand, price, and carpooling attractiveness scenarios. However, pricing, in combination with HOV facilities, provides greater flexibility in lane utilization under varying demand scenarios and, hence, is a potentially effective tool for managing congested network corridors.

17. Key Words	18. Distribution Statement:
Special use lanes, high-occupancy vehicle (HOV), and high-occupancy vehicle/toll (HOT)	No restrictions. This document is available to the public through the National Technical Information Service, Springfield, Virginia 22161.

19. Security Classif. (of report)	20. Security Classif. (of this page)	21. No. of pages	22. Price
Unclassified	Unclassified	164	

Form DOT F 1700.7 (8-72) Reproduction of completed page authorized

DEFINING SPECIAL-USE LANES: CASE STUDIES AND GUIDELINES

by

Pamela Murray, Hani S. Mahmassani, Ahmed Abdelghany, and Susan Handy

Research Report Number 0-1832-1

Research Project 0-1832

Project Title: *Defining Special-Use Lanes*

Conducted for the

TEXAS DEPARTMENT OF TRANSPORTATION

in cooperation with the

U.S. DEPARTMENT OF TRANSPORTATION
FEDERAL HIGHWAY ADMINISTRATION

by the

CENTER FOR TRANSPORTATION RESEARCH

Bureau of Engineering Research

THE UNIVERSITY OF TEXAS AT AUSTIN

December 1999

Revised: October 2000

DISCLAIMERS

The contents of this report reflect the views of the authors, who are responsible for the facts and the accuracy of the data presented herein. The contents do not necessarily reflect the official views or policies of either the Federal Highway Administration or the Texas Department of Transportation (TxDOT). This report does not constitute a standard, specification, or regulation.

There was no invention or discovery conceived or first actually reduced to practice in the course of or under this contract, including any art, method, process, machine, manufacture, design or composition of matter, or any new and useful improvement thereof, or any variety of plant, which is or may be patentable under the patent laws of the United States of America or any foreign country.

NOT INTENDED FOR CONSTRUCTION, BIDDING,
OR PERMIT PURPOSES

Hani S. Mahmassani, P.E. (Texas No. 57545)
Research Supervisor

ACKNOWLEDGMENTS

The authors acknowledge the support of TxDOT Program Coordinator Al Kosik. The authors also acknowledge the support and assistance of Ahmed Abdelghany.

Research performed in cooperation with the Texas Department of Transportation and the U.S. Department of Transportation, Federal Highway Administration.

TABLE OF CONTENTS

CHAPTER 1. INTRODUCTION 1
1.1 BACKGROUND 1
1.1.1 HOV Lanes 1
1.1.1.1 General Goals 1
1.1.1.2 Different Types of HOV Lanes 2
1.1.2 Congestion Pricing 5
1.1.3 HOT Lanes 7
1.2 MOTIVATION FOR CURRENT RESEARCH 8
1.3 STRUCTURE OF REPORT 9
CHAPTER 2. CASE STUDIES 11
2.1 HOV FACILITIES 11
2.1.1 I-395 Shirley Highway, Washington, D.C./Northern Virginia . 11
2.1.2 I-66, Washington, D.C./Northern Virginia 16
2.1.3 I-45 North Freeway, Houston, Texas 16
2.1.4 I-45S Gulf Freeway, Houston, Texas 20
2.1.5 I-10W Katy Freeway, Houston, Texas 22
2.1.6 US 290 Northwest Freeway, Houston, Texas 24
2.1.7 I-394 Minneapolis, Minnesota 26
2.1.8 Route 55 Commuter Lanes, Orange County, California 27
2.1.9 I-5N Seattle, Washington 27
2.1.10 I-5S Seattle, Washington 28
2.1.11 I-90 Seattle, Washington 28
2.1.12 I-279 Pittsburgh, Pennsylvania 29
2.1.13 Other HOV Facilities 29
2.1.13.1 Barnet/Hastings Corridor, British Columbia 29
2.1.13.2 I-30E East R. L. Thornton Freeway, Dallas, Texas ... 30
2.1.13.3 Summary of Various HOV Facilities 32
2.2 SPECIAL PROGRAMS 34
2.2.1 Sticker Program 34

2.2.2 QuickRide 35
2.3 PRICING 37
2.3.1 Route 91 37
2.3.2 I-15 39
2.3.2.1 Project Background 39
2.3.2.2 Project Phases 42
2.3.2.3 Toll Collection Procedure 43
2.3.2.4 Technical Performance of the Toll Collection Equipment 44
2.3.2.5 Enforcement 44
2.3.3 Project Impact Studies 45
2.3.3.1 Safety 45
2.3.3.2 Public Opinion 46
2.3.3.3 Land Use 47
2.3.3.4 Local Businesses 48
2.3.3.5 Bus Ridership 48
2.3.3.6 Truck Usage 49
2.3.3.7 Park and Ride Lot Utilization 49
2.3.3.8 Air Quality 50
2.3.4 Conclusions 51
2.4 CHAPTER SUMMARY 53

CHAPTER 3. GUIDELINES 55
3.1 OPERATIONAL CONSIDERATIONS AND GUIDELINES 55
3.1.1 HOV Facilities on Freeway Rights-of-Way 55
3.1.1.1 HOV Operational Alternatives 56
3.1.1.2 Ingress and Egress Alternatives 58
3.1.1.3 Vehicle Eligibility and Vehicle-Occupancy Requirements 61
3.1.1.4 Transit and Support Services and Facilities 63
3.1.1.5 Hours of Operation 64

3.1.1.6 Enforcement 65
3.1.1.7 Incident Management 67
3.1.2 HOV Facilities on Arterial Streets 68
3.1.2.1 General 68
3.1.2.2 Bus Stop Treatments 71
3.1.2.3 Vehicle Eligibility and Vehicle — Occupancy Requirements 72
3.1.2.4 Hours of Operation 73
3.1.2.5 Enforcement 73
3.1.2.6 Incident Management 73
3.1.2.7 Intersection Control, Driveway Access, and Curb Use Considerations 74
3.2 DESIGN GUIDELINES 74
3.2.1 HOV Facilities on Freeway Rights-of-Way 75
3.2.1.1 General 75
3.2.1.2 Separate Right-of-Way 77
3.2.1.3 Exclusive Freeway HOV Facility 77
3.2.1.4 Freeway Concurrent-flow 78
3.2.1.5 Contraflow 79
3.2.1.6 Beginning and Ending a Freeway HOV Lane 79
3.2.1.7 Design Considerations for Ramp Metering 82
3.2.1.8 Design Considerations for HOV Enforcement 82
3.2.1.9 Regulations and Guidelines for Signing and Pavement Markings for HOV Facilities 83
3.2.2 Design of HOV Facilities on Arterial Streets 84
3.2.2.1 General Considerations 84
3.2.2.2 Bus Malls 85
3.2.2.3 Right Side HOV Lanes 85
3.2.2.4 Left Side HOV Lanes 85
3.2.2.5 Center HOV Lanes 85
3.2.2.6 Contraflow on One-Way Streets 85

3.2.2.7 Bicycle Considerations 86
3.2.2.8 Signing and Pavement Markings 86
3.3 INSTITUTIONAL ARRANGEMENTS AND GUIDELINES 86
3.3.1 Federal Government and Federal Agencies 86
3.3.2 State Government and State Departments of Transportation 87
3.3.3 Metropolitan Planning Organizations 87
3.3.4 Transit Agencies 88
3.3.5 Local Municipalities 88
3.3.6 Rideshare Agencies 88
3.3.7 State and Local Police 89
3.3.8 Judicial System — State and Local Courts 89
3.3.9 Transportation Management Organizations, Transportation Management Associations, Downtown Councils 89
3.4 LEGAL ISSUES 89
3.5 ASSESSMENT OF EFFECTIVENESS 89
3.6 CHAPTER SUMMARY 92

CHAPTER 4. DYNAMIC TRAFFIC ASSIGNMENT 93
4.1 INTRODUCTION TO DYNASMART 93
4.1.1 Traffic Simulation 94
4.1.2 Traffic Generation and Initial Path Assignment 96
4.1.3 Travel Time Calculation 96
4.1.4 Traffic Control 97
4.1.5 K-Shortest Paths 97
4.2 MODIFICATIONS TO DYNASMART 98
4.2.1 HOT Lanes 98
4.2.2 K-Shortest Path 99
4.2.3 Stochastic Mode Choice 99
4.3 DESIGN OF EXPERIMENT 101
4.3.1 Test Network 101
4.3.2 Experimental Factors 103

4.3.2.1 Lane Utilization 103
4.3.2.2 Accessibility 103
4.3.2.3 Access Restriction (HOV versus HOT) 103
4.3.2.4 Pricing 104
4.3.2.5 Demand Levels 104
4.3.2.6 Mode Splits 105

CHAPTER 5. DATA AND ANALYSIS 115
5.1 LANE CONFIGURATION AND ACCESS POINTS 115
5.2 VEHICLE ELIGIBILITY 124
5.2.1 Low Demand, Higher Ridesharing Desirability 124
5.2.2 Middle Demand, Higher Ridesharing Desirability 125
5.2.3 High Demand, Higher Ridesharing Desirability 125
5.2.4 Low Demand, Lower Ridesharing Desirability 126
5.2.5 Medium Demand, Lower Ridesharing Desirability 127
5.2.6 High Demand, Lower Ridesharing Desirability 127
5.3 DEMAND 128
5.4 PRICING 129
5.5 UTILITY FUNCTION 133
5.6 CHAPTER SUMMARY 134

CHAPTER 6. CONCLUSIONS 135
6.1 CONCLUSIONS FROM COMPUTER SIMULATION EXPERIMENTATION 135
6.2 RECOMMENDATIONS FOR FUTURE STUDY 137
6.2.1 Experimentation 137
6.2.2 Determining Effectiveness of Special Lane Facilities 138

BIBLIOGRAPHY 139

LIST OF FIGURES

Figure 1.1a: Cross Section of Two-Way Exclusive HOV Facility, Separate ROW 3

Figure 1.1b: Cross Section of Exclusive HOV Facility with Freeway ROW 3

Figure 1.1c: Cross Section of Concurrent Flow HOV Facility 3

Figure 1.1d: Cross Section of Contraflow HOV Facility 4

Figure 1.2: Cross Section of HOV Bypass Facility 4

Figure 2.1: Comparison of Average Daily Park-and-Ride Usage for Houston Facilities 21

Figure 2.2: Location of I-15 Congestion Pricing Project 40

Figure 3.1: Sample Design of a Slip Ramp 58

Figure 3.2a: Sample Design of a T-Ramp 59

Figure 3.2b: Sample Design of a Y-Ramp 60

Figure 3.2c: Sample Design of a Flyover Ramp 61

Figure 4.1: Network 0 - I35W, Fort Worth, Texas 102

Figure 4.2: Network 1 106

Figure 4.3: Network 2 107

Figure 4.4: Network 3 108

Figure 4.5: Network 4 109

Figure 4.6: Network 5 110

Figure 4.7: Network 6 111

Figure 4.8: Network 7 112

Figure 4.9: Network 8 113

Figure 4.10: Network 9 114

Figure 5.1: Facility Usage by HOVs and SOVs that Have HOT Facility in Their Travel Paths 131

Figure 5.2: Comparison of Average Speeds for the Northbound Direction for Medium Pricing 132

Figure 5.3: Comparison of Average Speeds for the Northbound Direction under Low Pricing 133

LIST OF TABLES

Table 2.1: Comparison of I-95/I-395 HOV and Main Lane Traffic Data (1997) 13

Table 2.2: Peak Hour HOV Lane Utilization and Traffic Composition for Houston, TX Facilities 18

Table 2.3: Peak Period HOV Lane Utilization and Traffic Composition for Houston, TX Facilities 18

Table 2.4 Comparison of North Freeway HOV Lane and Main Lane Traffic Data (1996) 19

Table 2.5 Comparison of Gulf Freeway HOV Lane and Main Lane Traffic Data (1996) 21

Table 2.6 Comparison of Katy Freeway HOV Lane and Main Lane Traffic Data (1996) 23

Table 2.7 Comparison of Northwest Freeway HOV Lane and Main Lane Traffic Data (1996) 25

Table 2.8 Comparison of East R.L. Thornton Freeway HOV Lane and Main Lane Traffic Data (1996) 32

Table 2.9 Summary of HOV Facilities in North America 33

Table 2.10 Example of Maximum Toll Levels and Volume Thresholds for Toll Rate Look-Up for the Weekday Morning Peak Period 43

Table 2.11 Comparison of HOV Facilities 52

Table 3.1 Vehicle Volume Thresholds for Freeway HOV Lanes 63

Table 3.2 Vehicle Volume Thresholds for Arterial HOV Facilities 73

Table 4.1 Summary Description of Networks 104

Table 5.1 Average Trip Times (min) for Various Networks Under Low Demand, Higher Desirability of Ridesharing 116

Table 5.2 Percent Difference in Average Trip Times from Network 0 under Low Demand, Higher Desirability of Ridesharing 117

Table 5.3 Average Trip Times (min) for Various Networks Under Medium Demand, Higher Desirability of Ridesharing 118

Table 5.4 Percent Difference in Average Trip Times from Network 0 under Middle Demand, Higher Desirability of Ridesharing 118

Table 5.5 Average Trip Times (min) for Various Networks Under High Demand, Higher Desirability of Ridesharing 119

Table 5.6 Percent Difference in Average Trip Times from Network 0 under High Demand, Higher Desirability of Ridesharing 120

Table 5.7 Average Trip Times (min) for Various Networks Under Low Demand, Lower Desirability of Ridesharing 121

Table 5.8 Percent Difference in Average Trip Times from Network 0 under Low Demand, Lower Desirability of Ridesharing 121

Table 5.9 Average Trip Times (min) for Various Networks Under Medium Demand, Lower Desirability of Ridesharing 122

Table 5.10 Percent Difference in Average Trip Times from Network 0 under Medium Demand, Lower Desirability of Ridesharing 122

Table 5.11 Average Trip Times (min) for Various Networks Under High Demand, Lower Desirability of Ridesharing 123

Table 5.12 Percent Difference in Average Trip Times from Network 0 under High Demand, Lower Desirability of Ridesharing 123

Table 5.13 Comparison of Percentages of SOVs Using the HOT Facility Against the Various Demands 128

Table 5.14 Comparison of Percentages of HOVs Using the HOT Facility Against the Various Demands 129

Table 5.15 Percentages of HOVs that Use the HOV/HOT Facility that have the Facility as a Path Option (low demand, higher ridesharing desirability) 130

Table 5.16 Percentages of SOVs that Use the HOV/HOT Facility that have the Facility as a Path Option (low demand, higher ridesharing desirability) 130

Table 5.17 Comparison of Average Trip Times for Two Utility Function Constants for the Low Demand Level 134

Table 6.1 Summary of Successful Strategies for Various Scenarios 136

DEFINING SPECIAL-USE LANES:

CASE STUDIES AND GUIDELINES

ABSTRACT

This research assesses the feasibility of high-occupancy vehicle (HOV) and high-occupancy vehicle/toll (HOT) facilities. In this report, existing operational facilities are described and guidelines for the operation, design, agency involvement, and monitoring freeway and arterial HOV lanes are provided. The operational effectiveness of selected configurations was assessed using a specially modified dynamic traffic assignment methodology in combination with a stochastic mode choice model. A set of computer simulation experiments was conducted using a corridor network from Fort Worth, Texas, as a test bed. The goal of the experiments was to examine the effect of five variables on the average trip time of a network with an HOV/HOT facility. These variables included lane usage and access point restrictions, vehicle eligibility, demand levels, price, and attractiveness of carpooling. The results of the study indicated that there is no one combination of lane usage and access points that consistently out-performs the others under different demand, price, and carpooling attractiveness scenarios. However, pricing, in combination with HOV facilities, provides greater flexibility in lane utilization under varying demand scenarios and, hence, is a potentially effective tool for managing congested network corridors.

CHAPTER 1. INTRODUCTION

Transportation agencies have considerable difficulty providing — particularly in metropolitan areas — physical road capacity sufficient to meet increasing demands. Physical space for additional road construction is scarce, and the costs of building more freeways and arterial streets are high, all of which discourages the use of conventional supply-side strategies to alleviate traffic congestion problems. On the other hand, demand-side strategies to alleviate congestion are appealing. The number of people who wish to travel during periods of congestion could be accommodated without traffic problems if they shared rides or used transit. One way to encourage transit use and carpooling is to provide special-use lanes. Special-use lanes, for the purposes of this report, refer to high-occupancy vehicle (HOV) and high-occupancy/toll (HOT) lanes. The following sections discuss HOV lanes, congestion pricing, HOT lanes, reasons for investigating special-use lanes, and the organization of this report.

1.1 BACKGROUND

Section 1.1.1 provides an overview of HOV lanes, including the general goals and possible configurations of these facilities. Sections 1.1.2 and 1.1.3 discuss congestion pricing and HOT lanes, respectively.

1.1.1 HOV Lanes

Since it is becoming increasingly difficult to alleviate traffic congestion by creating more supply, the demand must be reduced. Given the high price of building a rail system and the high population density required for the success of rail modes, many cities have chosen to implement special-use lanes in freeway systems as a way to reduce solo-auto travel and, thereby, traffic demand. Some of these lanes, known as high-occupancy vehicle (HOV) lanes, are exclusive to buses, while others are available to buses, carpools, and vanpools.

1.1.1.1 General Goals. While the main purpose of an HOV facility is to improve the person movement in a corridor, several other objectives are associated with creating these special-use lanes. Air quality improvement is one of the major stated purposes of

HOV projects and the reason why many of these lanes are found in metropolitan areas that have been designated nonattainment areas. An area is designated a nonattainment area if it does not meet national ambient air quality standards set by the U.S. Environmental Protection Agency (EPA). Various objectives have been identified to measure the success of the HOV facility.

Turnbull et al. (1991) identified the following as the most common objectives of HOV facilities: increasing vehicle occupancy; increasing bus operating efficiency; providing travel time savings; providing a more reliable trip time for HOV lane users; favorably impacting air quality and energy consumption; minimally impacting the general purpose lanes; increasing the per-lane efficiency of the total freeway; maintaining the current safety levels; attracting public support; and cost-effectiveness. In addition to these objectives, Bracewell et al. (1999) included *compliance.* Wu and Chen (1999, p. 6) reported that the California Department of Transportation (Caltrans) has articulated a formal set of objectives for an HOV facility in its 1997 HOV Annual Report. These objectives are to:

"1. Increase the person-carrying capacity of transportation corridors;
2. Reduce the total trip times, energy consumption, and mobile source emissions;
3. Improve the efficiency and economy of public transit operations;
4. Provide travel time savings and a more reliable trip time to HOVs utilizing the HOV facility;
5. Have favorable impacts on air quality and energy consumption;
6. Increase the total per lane efficiency of the total freeway facility;
7. To be safe and not unduly impact the safety of the freeway general-purpose mainlines;
8. Be a cost-effective transportation strategy; and
9. Have public support."

1.1.1.2 Different Types of HOV Lanes. Turnbull and Hanks (1990) classified into four categories HOV facilities that are not located on arterial streets or that bypass metered ramps. The first category is an exclusive HOV facility with a separate right-of-way (see Figure 1.1a). These lanes (or roadways) are usually used by buses only. The

second category is an exclusive HOV facility with a freeway right-of-way (ROW); that is, only high-occupancy vehicles are granted use of this lane, which is physically separated from the general purpose lanes (see Figure 1.1b). Concurrent flow lane is the name given to the third type of HOV facility (see Figure 1.1c). This lane is not physically separated from the other lanes of the freeway. The contraflow lane is the fourth category (see Figure 1.1d). For this facility, a lane is "borrowed" from the off-peak direction for use by high-occupancy vehicles. The lane is separated from the off-peak flow by a moveable device.

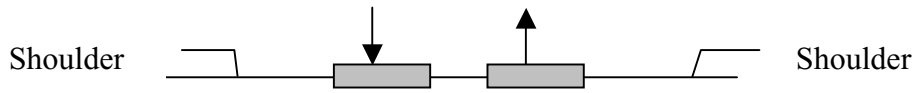

Figure 1.1a Cross Section of Two-Way Exclusive HOV Facility, Separate ROW

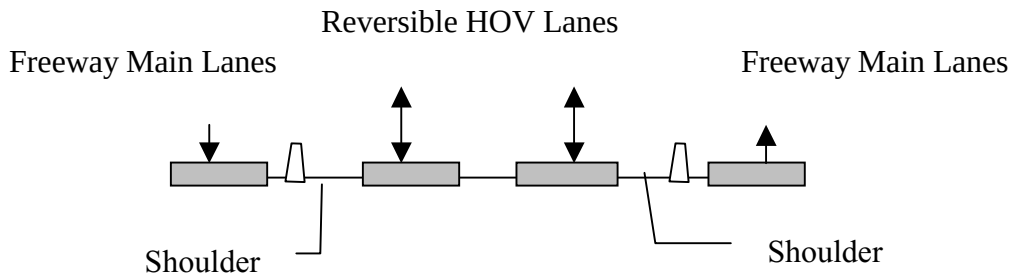

Figure 1.1b Cross Section of Exclusive HOV Facility with Freeway ROW

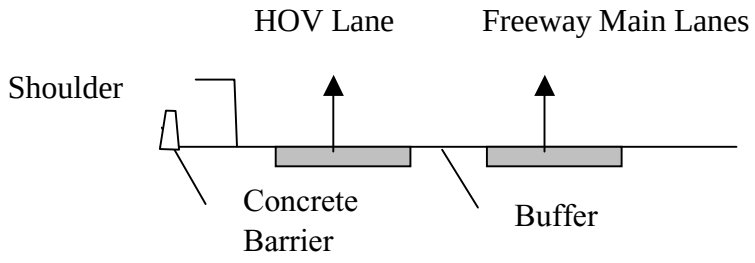

Figure 1.1c Cross Section of Concurrent Flow HOV Facility

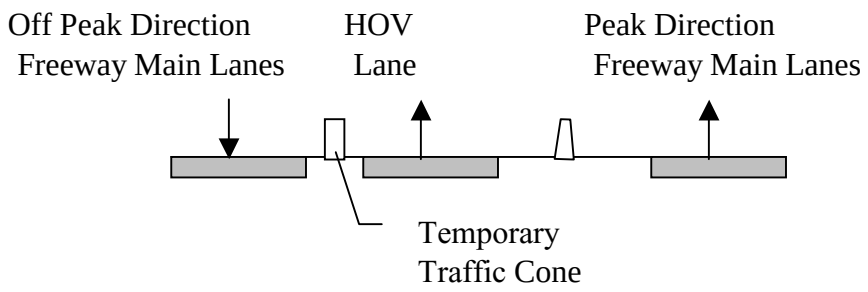

(Turnbull and Hanks 1990)

Figure 1.1d Cross Section of Contraflow HOV Facility

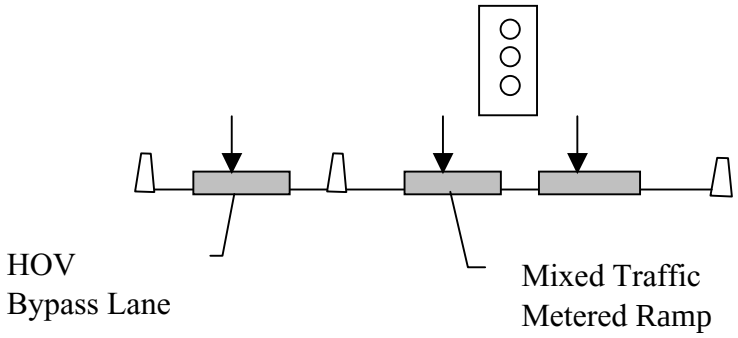

Figure 1.2 Cross Section of HOV Bypass Facility

HOV bypass lanes, a topic not covered by Turnbull and Hanks, represent another type of special facility designed to encourage carpooling and, thus, increase the person movement efficiency of the freeway (see Figure 1.2). The bypass lanes allow vehicles meeting a minimum occupancy requirement to enter a freeway, while other vehicles must wait to be permitted on the facility by a ramp metering system. This system is intended to limit congestion and keep traffic moving smoothly by restricting the flow of vehicles entering the freeway. Previous research has revealed that the travel-time savings offered by the bypass lanes alone are not sufficiently significant to induce the formation of new carpools (Rogers 1985).

1.1.2 Congestion Pricing

The pricing of roadways so as to balance supply and demand and improve roadway efficiency has received little consideration in the United States until quite recently. The theory of congestion pricing is based on the charging of a fee equivalent to the marginal external congestion costs that the driver generates by using the roadway at that particular time. The technical and political feasibility of this method has been limited, as discussed in the next few paragraphs (see also Verhoef et al. 1996).

The technical difficulties associated with congestion pricing stem from a lack of automatic toll collection methods. Traditional toll booths cause congestion and are not amenable to collecting variable tolls. Automatic vehicle identification (AVI) has allowed the development of electronic toll collection (ETC) methods, which can easily be adapted to variable pricing (Poole 1992). Acha-Daza, Moore, and Mahmassani (1995) described the ETC procedure as follows: An identification card, or "tag," that does not require any electrical connection or maintenance, is installed in the vehicle. When the vehicle passes a collection point, the card is read by an overhead or pavement-embedded device that identifies the unique vehicle number. The unique number is verified and the entrance point recorded. When the vehicle exits the facility, the card is read again and the appropriate toll applied. A record of the charges is kept, and a bill is issued periodically (e.g., once a month). Alternatively, the amount can be deducted automatically from a prepaid account.

In variable pricing, the toll charged to a user should be equivalent to the congestion externality. This value is the difference between the marginal cost and the average vehicle operating cost. The marginal cost is the cost that the driver imposes on the rest of the users by traveling on that facility at that time. Average vehicle operating costs, on the other hand, are the private costs incurred by the traveler. Ideally, the fees should be equivalent to the long-run marginal costs of adding capacity, including operating and maintenance costs. Current practice in the United States does not relate tolls to these long-run costs (Kain 1994).

The political reasons that inhibit the implementation of congestion pricing are a result of the public's unwillingness to pay for a service that is currently free. Over the past two decades, however, there has been an increased awareness of the negative

repercussions of high traffic-congestion levels. The idea of making drivers pay for the detrimental effects of their vehicles on the environment has gained support, especially because of air quality considerations (Poole 1992).

A common argument against congestion pricing is that low- and middle-income travelers do not have realistic alternatives for the trips that they presently take. These commuters demonstrate little sensitivity to price. The fees are thus viewed as a tax on unavoidable behavior. Experience has shown, however, that travelers do respond to pricing by changing their travel choices in a variety of ways, including time of departure, route choice, mode choice, and destination choice (Harvey 1994).

To avoid the view that congestion pricing is a governmental tax, the revenues can be returned to the taxpayers as a tax rebate. Low-income trip-makers would be the ones most adversely affected by congestion pricing, but they could still realize some benefits from the policy. Improvements to the transit system and carpooling alternatives would be beneficial to all travelers, especially the low-income trip-makers. The use of toll revenues as a per capita rebate or to reduce other taxes would further improve the situation for this class of travelers (Kain 1994).

The observation has been made that the redistribution of revenues from tolling would not solve all of the equity and fairness issues. In addition to income level, the gender and occupation of the traveler play a role in determining who is impacted by congestion pricing. Still other factors include the amount of household responsibilities, the availability of alternative work schedules, and the availability of travel modes other than solo driving. These differences would not be accounted for by a tax rebate (Giuliano 1994).

Charging drivers for roadway usage can affect several aspects of travel behavior of all travelers. The most evident is route choice, whereby drivers may select a new path that does not require out-of-pocket expenditures. If fees vary with congestion levels, travelers may opt to depart during times of lower traffic, and, thus, lower prices. Fees may influence destination choices and residential and employment locations. Pricing could reduce trip frequency and automobile ownership. When the toll is high, people may switch travel modes (Harvey 1994).

The primary mode shifts that would occur with congestion pricing are from the drive alone mode to shared ride or transit. Carpooling allows multiple travelers to split the costs of driving. Transit use virtually eliminates the fees incurred due to congestion pricing. Removing cars from the road would, theoretically, increase the travel speed and reliability for transit and thus make this alternative more attractive to the travelers.

1.1.3 HOT Lanes

High-occupancy/toll (HOT) lanes provide an opportunity to combine HOV lanes and congestion pricing. HOT facilities allow vehicles meeting a minimum occupancy requirement to use the roadway for free. Other vehicles that do not otherwise meet the occupancy requirement may be permitted on the facility for a fee.

HOV facilities are often criticized for being under-utilized, a phenomenon known as "empty lane syndrome." HOT lanes have been heralded as the solution to unproductive HOV lanes. Allowing vehicles containing less than the required occupancy, such as single-occupant vehicles (SOVs), to use the facility grants these travelers the higher speeds and shorter travel times enjoyed by the HOVs while eliminating the empty-lane syndrome. The number of SOVs permitted on the roadway must be limited so that the facility does not become congested. In order to be successful, the HOT facility must maintain travel time savings and reliability over the general purpose lanes. To maintain these attributes, the HOT facility may increase the fees as the congestion on the facility increases.

HOT facilities do have political appeal. They offer a market-based compromise between HOV lanes and heavily congested mixed-traffic lanes. The political appeal stems from the provision of choice. Another political benefit is that HOT facilities rescue under-utilized HOV lanes. Furthermore, the fees charged provide revenue that could be used to improve transit or promote ridesharing programs (Cervero 1999).

Views of HOT lanes have not all been positive, however. A common criticism is that the HOT facilities are elitist, with some critics dubbing them "Lexus lanes." The presumption is that only the rich will use the facility, although everyone is, in fact, offered the option to use the lanes. For instance, a parent who is late picking up a child

from day care may choose to pay a $3 toll instead of the $10 day care penalty (Cervero 1999).

Pricing the extra capacity of HOV lanes allows for more efficient use of the roadway. The public may have preconceived notions that only the rich will use the lanes, but as experience with HOT facilities becomes more widespread, the person who is late will realize the benefits of having the lanes.

1.2 MOTIVATION FOR CURRENT RESEARCH

Urban congestion has become a severe problem in numerous cities, resulting in considerable delays, productivity losses, air pollution problems, and associated accidents and fatalities. Federal mandates have impressed the importance of air pollution control on local officials. The congestion problem appears to be no longer easily resolvable by adding capacity to existing roadways. Consequently, transportation agencies are considering operational strategies that will optimize the use of available capacity and maximize the benefits for the state's economy and its residents' mobility. The efficiency can be improved by increasing the person-throughput of the facility, a task accomplished by increasing the average vehicle occupancy.

A variety of high-occupancy vehicle facilities are in operation in the United States. As of yet, there has been no standard design and operation plan that will guarantee the success of an HOV lane. Within this context, a synthesis of findings and experiences from current HOV facilities would be helpful as new HOV facilities are considered.

High-occupancy/toll facilities, or modified versions of HOV lanes, are relatively new in the United States. Pricing the excess capacity of the facility provides a method by which to regulate low-occupant-vehicle demand for the available space on an HOV facility. In such a scheme, there should be a toll reasonable enough to attract an optimal number of users, such that the facility is well used but not congested. The low-occupant-vehicle drivers would be given an opportunity to pay for time savings with *currency*, whereas now they pay for the imbalance between capacity and demand with *time*. Various aspects of the HOT concept need to be considered: public acceptance, social equity, operation and design issues, and enforcement are some examples.

The objectives of this research are to investigate several issues arising from conflicting needs and to develop approaches for operating special-use lanes. Among the issues investigated are access points, hours of operation, and enforcement. Technological, institutional, and legal issues are also identified and discussed. Furthermore, Project 0-1832 assesses the effectiveness of various special-use lanes and operating strategies.

To accomplish these objectives, the researchers have compiled the rather disjointed information pertaining to existing special-use lanes in the United States. This assimilation is complemented with carefully designed computer simulation experiments to develop guidelines for the operation, design, and effective institutional arrangements for special-use lanes.

1.3 STRUCTURE OF REPORT

This report is divided into five remaining chapters. Chapter 2 contains case studies of North American facilities having special-use lanes. Chapter 3 presents guidelines for the operation, design, institutional arrangements, and monitoring of freeway and arterial HOV lanes. Chapter 4 introduces the concept of dynamic traffic assignment and provides an overview of the software used, the modifications made to the previously existing software, and the experimental design. Chapter 5 presents the results of the traffic simulation and analysis. Finally, Chapter 6 summarizes the important findings of the research and recommends further areas for investigation.

CHAPTER 2. CASE STUDIES

This chapter describes special-use lanes currently operating in North America. First, high-occupancy vehicle (HOV) facilities are discussed, including the years of implementation, vehicle-occupancy requirements, vehicle eligibility, hours of operation, and volumes (when attainable). Some public opinion survey results were available and are summarized here. After the "pure" HOV lanes are discussed, modified HOV facilities are described. These modified facilities include the sticker program in Boston, Massachusetts, the QuickRide program in Houston, Texas, and, finally, the high-occupancy/toll lanes in San Diego, California.

2.1 HOV FACILITIES

Turnbull and Christiansen (1992) have identified ten characteristics common to the following HOV facilities: the Shirley Highway and I-66 in Washington, D.C./Northern Virginia; I-45N, I-45S, I-10W, and US 290 in Houston; I-394 in Minneapolis; RT 55 in Orange County, California; I-5 and I-90 in Seattle; and I-279 in Pittsburgh. In all of these corridors, there was heavy congestion and a large amount of predicted growth. Fixed guideway transit was lacking in these areas of the country. When the HOV facilities were constructed, highway improvements were already planned for those corridors. Each of the projects had a supporter in a position of authority. Legislative direction was provided for the projects. The other five commonalties included the presence of a lead agency, interagency cooperation, joint funding, federal support, and flexibility and adaptability. The HOV facilities listed above are discussed in turn in the following sections.

2.1.1 I-395 Shirley Highway, Washington, D.C./Northern Virginia

The operation of the I-95/I-395 HOV lanes is the responsibility of the Virginia Department of Transportation (VDOT). Turnbull, Henk, and Christiansen (1991) point out that the Shirley Highway (I-395) was the first major HOV facility in the United States. The original objectives were to increase bus service reliability, bus route coverage, passenger convenience and comfort, transit market share, mobility of the

disadvantaged, and productivity of the bus operator, and to decrease travel time for all travel modes, emissions, and fuel consumption. The facility was initially opened in 1969 and consisted of a 5-mile bus-only lane. Additions were made until 1975 when the facility consisted of two, 11-mile-long, barrier-separated, reversible lanes in the median of the freeway. Vanpools and carpools of a minimum of four people were first allowed on the HOV lane in December 1973. The carpool requirement was reduced to three in January 1989. Before 1985, the HOV lanes were inbound from 11:00 p.m. to 11:00 a.m. and outbound from 1:00 p.m. to 8:00 p.m. (Turnbull 1992a). A demonstration project in 1985 required changing the hours during which the lanes were open — to transit, school, and private buses; taxis; vanpools; and carpools of three or more — to 6:00 a.m. to 9:00 a.m. and 3:30 p.m. to 6:00 p.m. (Turnbull, Henk, and Christiansen 1991). The length of the facility in 1999 was 27 miles. Motorcycles are currently allowed on the HOV lanes without passenger requirements. Trucks are also allowed on the reversible HOV lanes, but they must comply with occupancy requirements. During the nonrestricted hours, the HOV lanes are open to general purpose traffic (BMI et al. 1999).

The Shirley Highway HOV lanes have been successful in achieving a lane efficiency higher than that of the freeway main lanes (see Table 2.1). During the 3-hour peak period, the two HOV lanes serve more total person trips than the four general purpose lanes in less than half the number of vehicles. The travel times incurred by users of the HOV lanes are half those of the freeway main lane users. During the morning restricted period, the HOV lanes operate at level of service (LOS) D or better, with the majority of the sections operating at LOS C or higher. The accident frequency of the HOV lanes for 1996 and 1997 was considered low for a freeway facility (BMI et al. 1999).

Violations for 1997 were estimated from vehicle occupancy count data. During the morning restricted period, the violation rate was calculated to be 35 to 45 percent, but roughly half of these violations occurred during the first 30 minutes of operation. Non-HOVs may enter the HOV lanes before the start of the restricted period and not reach their exits until the restrictions are in effect. These trips are considered legal and could explain the high violation rate. The Virginia State Police provide enforcement for the

facility. Their activities concentrate on the access and egress ramps, which are considered easier and safer to monitor than the HOV lanes themselves (BMI et al. 1999).

Table 2.1 Comparison of I-95/I-395 HOV Lane and Main Lane Traffic Data (1997)

	HOV Lanes		Freeway Main Lanes	
	A.M. Peak hour	3-hr Peak Period (2 lanes)	A.M. Peak hour	3-hr Peak Period (4 lanes)
Total person trips		28,400		24,900
Total vehicle trips		10,519		22,035
Average vehicle occupancy (persons/vehicle)		2.70		1.13
Lane efficiency (1000s) (passengers x miles/hour)	312		52	

VDOT has received frequent comments from general purpose lane users that the HOV lanes in the I-95/I-395 corridor are underutilized. In response, VDOT commissioned a study of the corridor. The study group, led by BMI, evaluated five alternatives:

1. changing the HOV occupancy requirements from 3+ to 2+ for the entire corridor,
2. changing the occupancy requirements from 3+ to 2+ outside the Capital Beltway,
3. altering the times of the restricted periods,
4. providing additional access and egress ramps for the HOV facility, and
5. adding another HOV lane inside the Beltway.

The impact of each alternative on mode splits was determined using a model known as the Shirley Highway Model, which uses travel times and costs to estimate the number of people choosing each mode. Existing data on person trips by mode were input into the model, along with current travel times and estimated travel times for each alternative. The model estimated the new number of trips by each mode for each origin-

destination pair. The HOV trips were assigned to the HOV lanes. Then the volumes at the HOV lane ramps were input into computer simulation software. This software (CORSIM) estimated new travel times for HOVs, which were then compared with the estimated travel times used to generate the demand. Iterations were completed as necessary to achieve agreement between the computer estimated travel times and those used to generate the demand that was input into the software (BMI et al. 1999).

The first alternative would have a vast impact on the traffic conditions within the corridor. A large increase in two-occupant vehicles and a decrease in vanpools would be expected. Little change in SOV and transit use would be anticipated. In terms of person and vehicle volumes, little variation from the current conditions would be expected for the general purpose lanes. Bus ridership may decrease while train ridership may increase. The HOV lanes both inside and outside the Beltway should have peak hour person volumes similar to those currently experienced; however, the vehicle volumes would increase. Owing to the increased traffic volumes, the level of service inside the Beltway would deteriorate to LOS E or F. The travel times would increase while speeds would decrease. The safety of the facility, as gauged by the number of accidents, would be negatively impacted. Enforcement should not change dramatically, but shoulder operations would become more hazardous. Finally, moderate increases in volatile organic carbons (VOCs) and nitrous oxide (NOx) emissions would be anticipated (BMI et al. 1999).

The second option, altering the occupancy requirements outside of the Capital Beltway, would not have as much impact on the HOV lanes as the first alternative. A rise in the number of two-occupant vehicles would be expected for this alternative. A slight decrease in the number of vanpools would be anticipated. There should be little change in the number of transit users. The person and vehicle volumes for the general purpose lanes are predicted to remain constant. On the HOV lanes inside the Beltway, the peak hour person throughput volume should decrease. Outside the Beltway, the person volume on the HOV lanes should increase along with the vehicle volume. The anticipated level of service for the HOV lanes is the same as that for the base conditions with the exception of the ramps where HOV2s must exit. Travel speeds and times should not deteriorate significantly. The number of accidents on the roadway would be likely to

increase due to the increased vehicular volume. Enforcement needs would remain similar to those at the present time. In terms of air quality, the impact of changing the occupancy requirements outside the Capital Beltway would be a slight decrease in VOCs and an increase in NOx (BMI et al. 1999).

Altering the restriction times, the third alternative, requires little cost. If the morning period began at 5:30 instead of 6:00, the number of person trips and vehicle volumes on the HOV lanes should decrease during a half-hour period. Transit usage would be expected to rise. If the morning period ended at 8:30 instead of 9:00, the vehicle volumes and person trips on the HOV lanes should increase. Some areas would experience congestion. The final possible change in times that was considered was ending the evening period at 6:30 instead of 6:00. In response to this alteration, HOV lane congestion should decrease significantly, transit usage should increase during these 30 minutes, and heavy congestion should be experienced on the general purpose lanes (BMI et al. 1999).

The fourth alternative — adding access and egress ramps — is a more expensive option than the previous three. The formation of new carpools would be expected, and, as a result, the utilization of the HOV facility would increase (BMI et al. 1999).

Adding another HOV lane inside the Beltway represents the most expensive alternative explored. In order to avoid impacting the general purpose lanes and to meet VDOT and AASHTO guidelines, the freeway main lanes would have to be moved between 7 and 17 feet. Moving the lanes was determined to be cost-prohibitive. If substandard shoulder widths were permitted, the cost for construction inside the Beltway was estimated to be $21,700,000 (BMI et al. 1999).

The conclusions reached by the BMI study team highlight some important observations. One example is implied in the discussion of alternatives one and two: the smallest carpool is the easiest to form and maintain. Allowing a reduction in vehicle occupancy requirements would probably cause some three+ person carpools to split. Some two-person carpools may be formed by former solo drivers, transit riders, or a combination thereof. The change in restrictions may also cause some route switching; two-person carpools that previously used the mixed traffic lanes would be given the option to use the HOV lanes.

BMI et al. (1999) recommended additional studies before action is taken. One additional consideration was the change in occupancy requirements within the peak period, as found in Houston, Texas, on the Katy Freeway. The second suggestion was to end the restricted period earlier in the southern portion of the HOV lanes. The third area of recommended study was high-occupancy/toll (HOT) lanes. Finally, the use of slip ramps instead of new HOV ramps at interchanges was recommended for investigation.

2.1.2 I-66, Washington, D.C./Northern Virginia

According to Turnbull (1992b), the HOV facility on I-66 opened in 1982 and consisted of two lanes operating in the peak direction. These lanes were 9.6 miles long and were converted from previously existing freeway lanes. These lanes were exclusively usable by transit, school, and private buses; by taxis, vanpools, and carpools of three or more members; and by all Dulles Airport traffic from 6:30 a.m. to 9:00 a.m. and from 4:00 p.m. to 6:30 p.m. Morning peak direction data indicate that six buses carried 146 passengers and that 512 vanpools and carpools served 2,124 travelers on the HOV lane during the peak hour. During the 2.5-hour peak period, forty-one buses transported 846 passengers and 869 vanpools and carpools served 3,514 travelers (Turnbull 1992b). Federal law allowed motorcycles to use the HOV facility as of 1992.

Bonaccorsi (1996) reported that in 1991, a peak hour HOV lane was formed from the shoulder of the Capitol Beltway to connect to the Route 50/I-66 interchange. This new section of HOV facility reaches into the growing areas of western Fairfax and Prince William Counties. The traffic management system for the I-66 corridor includes full-coverage video surveillance, changeable message signs, and embedded loop detectors and piezometers.

2.1.3 I-45 North Freeway, Houston, Texas

Turnbull, Henk, and Christiansen (1991) reported that the first HOV facility in Houston, Texas, was a contraflow lane on I-45. The facility started as a demonstration program funded in 1979 by the Urban Mass Transportation Administration (UMTA). The objectives of this project were to decrease (or slow the growth of) vehicle-miles of travel, fuel consumption, emissions, congestion, and travel time, increase vehicle occupancy in the corridor, and encourage the use of public transportation. The

demonstration project was deemed successful and has led to other HOV projects in Houston. The objectives of all of the HOV facilities in Houston include increasing the person-movement capacity of the freeway, minimally impacting freeway main lane operation, being cost-effective, having public support, and favorably impacting air quality and fuel consumption.

Turnbull (1992b) reported that the I-45N HOV facility was implemented in various stages from 1979 to 1990 and consists of one 13.5-mile reversible lane. In 1979, the HOV facility consisted of a contraflow lane (Stockton et al. 1997). The HOV lane in the median of the freeway, separated from the four general purpose lanes in each direction by concrete barriers, opened on November 23, 1984, and replaced the contraflow lane. The typical lane width was 20 feet. Carpools of two or more occupants were not allowed on the lane until June 26, 1990. Motorcycles were first permitted on the HOV lane on September 8, 1992. The HOV lane was open on the weekends from June 30, 1990, to October 5, 1991. In the early 1990s, the hours of operation were from 5:45 a.m. to 8:45 a.m. and from 3:30 p.m. to 7:00 p.m., but the hours underwent two revisions in 1994 and one in 1996. The hours of operation after September 30, 1996, were from 5:00 a.m. to 11:00 a.m. and from 2:00 p.m. to 8:00 p.m., reflecting the growing congestion in the Houston area (Stockton et al. 1997).

The most significant increase in the number of vehicles using the HOV lane during the peak hour occurred during 1990, when carpools were permitted to use the facility. The number of people traveling by vanpool and, consequently, the number of vans have shown a slowly decreasing trend from the mid-1980s to 1996. The number of buses remained relatively constant for that time period, though bus ridership showed a sharp decline between 1994 and 1996. The number of trips made during the morning peak hour has generally increased both on the HOV lane and on the freeway main lanes since 1983 (Stockton et al. 1997).

Compared to a freeway with no HOV lane (Eastex Freeway), I-45N, with the HOV lane, has consistently had a higher average vehicle occupancy. The peak hour per lane efficiency has also been higher, except during early- to mid-1989 when construction was occurring on the North Freeway for the purpose of extending the HOV lane. The North Freeway maintained 3,000 to 4,000 more bus passenger trips than the Eastex

Freeway (US 59) between 1983 and 1996 (see also Figure 2.1). Furthermore, the number of vehicles in a park-and-ride lot on a given day has been at least 2,000 more for I-45N than for US 59 since 1981 (Stockton et al. 1997).

Table 2.2 provides the peak hour HOV lane utilization and traffic composition for four HOV facilities located in Houston, Texas. These facilities include I-45N, I-45S, I-10, and US 290. Table 2.3 provides similar data but for the peak period.

Table 2.2 Peak Hour HOV Lane Utilization and Traffic Composition for Houston, Texas, Facilities

Facility	Daily Person Trips	Morning Peak Hour Person Trips	Carpool percent	Vanpool percent	Bus percent	Motorcycle percent	Total Vehicles
I-45N (North)	20,382	4,947	52	5	42	1	1,338
I-45S (Gulf)	7,922	2,155	75.6	1.6	22.7	0.1	799
I-10W (Katy)	19,000	3,340	59.8	4.1	35.9	0.2	916
US 290	13,644	3,717	75.6	1.4	22.9	0.1	1,429

Table 2.3 Peak Period HOV Lane Utilization and Traffic Composition for Houston, Texas, Facilities

Facility	Peak Period (hrs)	Peak Period Person Trips	Carpool percent	Vanpool percent	Bus percent	Motorcycle percent	Violation Rate percent
I-45N (North)	3.5	9,645	55.6	5.2	39.1	0.1	6
I-45S (Gulf)	3.5	4,033	76.1	2.5	21.3	0.1	3
I-10W (Katy)	3.5	8,496	63.1	4.6	32.1	0.2	17
US 290	3.5	6,852	75.9	1.2	22.5	0.4	5.4

Source: Stockton et al. (1997).

The average vehicle occupancy and peak hour lane efficiency were much higher for the HOV lane than for the freeway main lanes (see Table 2.4). Although the general

purpose lanes served a significantly higher number of travelers during the peak hour and peak period, the per-lane efficiency was lower than that for the HOV lane. This higher per-lane efficiency indicated that the North Freeway HOV lane successfully increased the overall person movement efficiency of the roadway.

The HOV lane accident rate was 41.2 injury accidents per 100 million vehicle miles (MVM) for the time period from November 1984 to December 1996. The rate for the general purpose lanes was 25.1 injury accidents per 100 MVM from December 1984 to December 1996. Between January 1982 and November 1984, when the HOV lane opened in the median of the freeway, the accident rate on the freeway was 30.3 injury accidents per 100 MVM (Stockton et al. 1997). The accident rate on the HOV lane was noticeably higher than that on the main lanes.

Table 2.4 Comparison of North Freeway HOV Lane and Main Lane Traffic Data (1996)

	HOV Lane		Freeway Main Lanes	
	A.M. Peak hour	Peak Period (3.5 hours)	A.M. Peak hour	Peak Period (3.5 hours)
Total person trips	4,947	9,645	7,817	22,382
Total vehicle trips	1,338	2,743	7,689	21,394
Average Vehicle Occupancy (persons vehicle)	3.7	3.52	1.02	1.05
Lane Efficiency (1000s) (passengers x miles/hour)	262		44	

During the morning peak hour, HOV lane users saved an average of 14 minutes over the general purpose lane users in 1996 (Stockton et al. 1997).

A benefit-cost analysis performed by Texas Transportation Institute (TTI) researchers estimated annual discounted benefits of $48 million over an assumed 20-year project life. The benefits included delay savings and reductions in fuel consumption. The estimated capital costs in 1996 dollars were $161.5 million, which included lane and ramp construction, surveillance and communication, and support facilities. Other costs that were included in the analysis included vehicle operating costs and accident costs.

Accordingly, the estimated benefit-to-cost ratio for the North Freeway HOV lane was 11 (Stockton et al. 1997).

2.1.4 I-45S Gulf Freeway, Houston, Texas

The HOV facility on I-45S in Houston, which opened in 1988, consists of one 6.5-mile reversible lane. Concrete barriers are used to separate the HOV lane from the four general purpose lanes. The facility was open on the weekends from October 1, 1989, until October 5, 1991. Only transit, school, and private buses, as well as taxis, vanpools, and carpools of two or more members, were permitted to use the lane from 4:00 a.m. to 1:00 p.m. and from 2:00 p.m. to 10:00 p.m. during the early years of operation. Motorcycles were allowed on the HOV lane without occupancy restrictions on September 8, 1992. The hours of operation were changed in April 1994 and again at the end of September 1996. The 1996 revised hours were 5:00 a.m. to 11:00 a.m. and 2:00 p.m. to 8:00 p.m. (Stockton et al. 1997).

Tables 2.2 and 2.3 provide facility utilization data for 1996. The numbers of vans and buses using the HOV lane have shown little variation between 1994 and 1996. Most of the variability in the number of people and vehicles using the lane has been due to the number of carpoolers. Since the opening of the HOV lane, the park-and-ride lot usage has been consistently higher for the Gulf Freeway than for the Eastex Freeway, which does not have an HOV lane (see Figure 2.1). The park-and-ride demand for the Gulf Freeway has fluctuated since the opening of the HOV lane. The highest demand occurred in late 1990 (Stockton et al. 1997).

The average vehicle occupancy and peak hour lane efficiency were much higher for the HOV lane than for the freeway main lanes (see Table 2.5). In terms of increasing the person movement efficiency of the roadway, the Gulf Freeway HOV lane was successful.

The accident rate for the Gulf Freeway HOV lane from May 16, 1988, to December 1996, was 8.9 injury accidents per 100 MVM. The rate for the main lanes for the same period was 19.9 injury accidents per 100 MVM. Before the HOV lane was constructed, the accident rate was 29.8 injuries per 100 MVM. An important factor in considering before-and-after accident data is the fact that the freeway main lanes were

narrowed for the construction of the HOV lane and no inside emergency shoulder currently exists on the freeway (Stockton et al. 1997).

Table 2.5 Comparison of Gulf Freeway HOV Lane and Main Lane Traffic Data (1996)

	HOV Lane		Freeway Main Lanes	
	A.M. Peak hour	Peak Period (3.5 hours)	A.M. Peak hour	Peak Period (3.5 hours)
Total person trips	2,155	4,033	6,573	19,594
Total vehicle trips	799	1,530	6,123	18,327
Average Vehicle Occupancy (persons/vehicle)	2.7	2.64	1.07	1.07
Lane Efficiency (1000s) (passengers x miles/hour)	114		76	

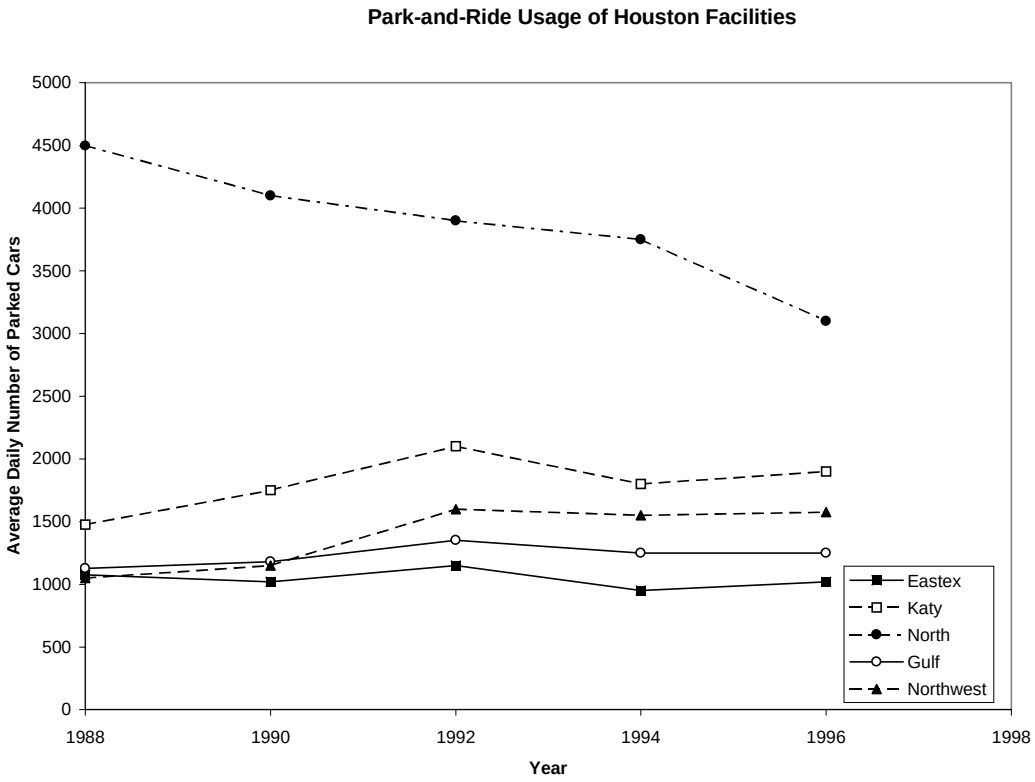

(Generalized from Stockton et al., 1997)

Figure 2.1 Comparison of Average Daily Park-and-Ride Usage for Houston Facilities

HOV lane users saved an estimated 4 minutes over general purpose lane users during the peak hour in 1996. In addition to the travel time savings, the benefits used to calculate the benefit-cost ratio included reductions in vehicle operating costs, fuel consumption, and accidents. The costs that were used were for construction, facility maintenance and operation, vehicle operation, and accidents. A 20-year project life was assumed, and the resulting benefit-cost ratio was 10 (Stockton et al. 1997).

2.1.5 I-10W Katy Freeway, Houston, Texas

The HOV facility on I-10W, implemented in stages between 1984 and 1990, consists of one 13-mile reversible lane. Concrete barriers are used to separate the HOV lane from the three general purpose lanes in each direction. The types of vehicles allowed on the Katy Freeway HOV lane have changed throughout the years as a result of low utilization of the facility. Upon opening in 1984, only buses and authorized vanpools were permitted on the HOV lane, but in April 1985, authorized carpools of four or more members were allowed to use the facility. The vehicle-occupancy requirement was dropped to three in late 1985 and then to two in August 1986. Authorization was no longer required after August 1986. Motorcycles were allowed on the HOV lane starting on September 8, 1992.

With the loosening of restrictions came an increase in the traffic volumes, to the extent that the carpool requirement was reinstated to three for part of the morning peak (6:45 a.m. to 8:15 a.m.) in October 1988. This time interval changed to 6:45 a.m. to 8:00 a.m. in May 1990. Finally, in the latter part of 1991, the carpool requirement of three was reinstated for the 5:00 p.m. to 6:00 p.m. period (Turnbull 1992a). Tables 2.2 and 2.3 provide specific data for facility utilization in 1996. Weekend operation began on October 1, 1989, and ended March 7, 1994, only to be resumed again on April 4, 1994. The facility hours were modified again on September 30, 1996, from 5:00 a.m. to 11:00 a.m. and from 2:00 p.m. to 8:00 p.m. (Stockton et al. 1997). Under-utilization during the HOV3 restriction times has led to the QuickRide program described below in Section 2.2.2.

For the HOV lane, the average vehicle occupancy and peak hour lane efficiency were much higher than those for the freeway main lanes (see Table 2.6). The average

vehicle occupancy for the Katy HOV facility was even higher than that for the other HOV lanes in Houston, Texas, because of the requirement of three occupants for more than a third of the morning peak period. In terms of increasing the person movement efficiency of the roadway, the Katy Freeway HOV lane was successful.

Between November 1984 and December 1996, the accident rate for the HOV lane was 21.8 injury accidents per 100 MVM. From November 1984 to August 1995, the rate for the freeway main lanes was 20.9 officer-reported injury accidents per 100 MVM. Prior to the implementation of the HOV lane (January 1982 – October 1984), the rate was 20.0 accidents per 100 MVM. The accident rate for the freeway has increased slightly since the HOV lane was opened, with this increase perhaps partly a result of the narrowing of the freeway lanes and of the lack of inside emergency shoulder (Stockton et al. 1997), which would indicate a negative impact on the general purpose lanes.

Table 2.6 Comparison of Katy Freeway HOV Lane and Main Lane Traffic Data (1996)

	HOV Lane		Freeway Main Lanes	
	A.M. Peak hour	Peak Period (3.5 hours)	A.M. Peak hour	Peak Period (3.5 hours)
Total person trips	3,340	8,496	5,246	16,386
Total vehicle trips	916	2,553	4,731	14,788
Average Vehicle Occupancy (persons/vehicle)	3.65	3.33	1.12	1.11
Lane Efficiency (1000s) (passengers x miles/hour)	175		33	

In 1996 it was estimated that 17 minutes were saved during the morning peak hour by using the HOV lane instead of the general purpose lanes for the freeway section of a commute. By use of a procedure similar to that used for the other Houston HOV facilities, the benefit-cost ratio was calculated to be 78 for an assumed project life of 20 years (Stockton et al. 1997).

TTI conducted a survey of HOV lane users and nonusers in 1994 to gauge public opinion regarding the HOV lanes in Houston. In response to the question, “Are the HOV facilities good transportation improvements?”, 66 percent of the people interviewed on

the Katy Freeway replied "yes," while 20 percent said "no," and 14 percent were "not sure." The second question asked was, "Are the HOV lanes sufficiently utilized?" Of the bus riders surveyed, 64 percent thought the lanes were sufficiently utilized, 17 percent did not, and 19 percent were unsure. Eighty-eight percent of the carpoolers and vanpoolers replied "yes" to the second question, while only 12 percent replied "no." The main lane users were asked to consider the second question in two parts, one for vehicle utilization and one for person utilization. Only 21 percent of the general purpose lane users thought the HOV lane was sufficiently utilized by vehicles; 62 percent thought the lane was insufficiently utilized, and 17 percent were unsure. In terms of person utilization, 19 percent of the main lane drivers thought the lane was sufficiently utilized, 59 percent did not, and 22 percent were not sure (Stockton et al. 1997). The striking asymmetry in the perceptions of the users and those of nonusers reflects the polarized nature of public opinion towards HOV facilities. Surveys of this nature, however, provide neither a reliable nor a scientific basis on which to predict actual usage; accordingly, such surveys should not be the sole guide in public decision-making.

2.1.6 US 290 Northwest Freeway, Houston, Texas

The US 290 HOV facility, which opened in 1988, consists of one 13.5-mile reversible lane. Concrete barriers are used to separate the HOV lane from the three general purpose lanes. No further construction was anticipated as of 1996. Only transit, school, and private buses and taxis, vanpools, and carpools of two or more people were permitted on the lane from 4:00 a.m. to 1:00 p.m. and from 2:00 p.m. to 10:00 p.m. until September 8, 1992, when motorcycles were permitted on the HOV lane. The facility was operational on the weekends from October 1990 until October 1991. The hours of operation were revised twice in 1994 and once in 1996. The 1996 hours were from 5:00 a.m. to 11:00 a.m. and from 2:00 p.m. to 8:00 p.m. (Stockton et al. 1997).

The number of travelers using vanpools and buses on the HOV lane has been fairly stable since the implementation of the facility (see Tables 2.2 and 2.3 for 1996 data). The fluctuation of total HOV lane users followed the number of people using carpools. Park-and-ride demand has been highly variable but has generally increased since 1988 (Stockton et al. 1997).

Table 2.7 Comparison of Northwest Freeway HOV Lane and Main Lane Traffic Data (1996)

	HOV Lane		Freeway Main Lanes	
	A.M. Peak hour	Peak Period (3.5 hours)	A.M. Peak hour	Peak Period (3.5 hours)
Total person trips	3,717	6,852	5,821	17,110
Total vehicle trips	1,429	2,703	5,560	16,026
Average Vehicle Occupancy (persons / vehicle)	2.6	2.53	1.05	1.07
Lane Efficiency (1000s) (passengers x miles / hour)	182		50	

Table 2.7 compares the 1996 data for the Northwest Freeway HOV lane with that for the general purpose lanes. The HOV facility's average vehicle occupancy was more than double that of the main lanes. The per-lane efficiency was also much higher for the HOV facility, which indicated that the facility was successful in meeting its primary goal of improving roadway efficiency.

Between August 1988 and December 1996, the accident rate for the HOV lane was 12.6 officer-reported injury accidents per 100 MVM. From September 1988 to December 1996, the rate for the freeway main lanes was 10.9 injury accidents per 100 MVM. Prior to the implementation of the HOV lane (January 1982 – August 1988), the rate was 11.7 accidents per 100 MVM. The reported rate for the freeway has apparently decreased since the HOV facility was opened, notwithstanding the narrowing of the freeway lanes and lack of inside emergency shoulder (Stockton et al. 1997).

In 1996 the estimated time savings enjoyed by the HOV lane users was 22 minutes during the morning peak hour. The benefit-cost ratio was calculated to be 15 under similar assumptions regarding other Houston facilities (Stockton et al. 1997).

The Northwest Freeway was part of the survey conducted by TTI in 1994. In response to the question, "Are the HOV facilities good transportation improvements?", 65 percent of the people interviewed on the Northwest Freeway replied "yes," while 14 percent said "no," and 21 percent were "not sure." To the second question, "Are the HOV lanes sufficiently utilized?", 71 percent of the bus riders surveyed replied "yes," 11 percent said "no," and 18 percent were unsure. Eighty-three percent of the carpoolers and vanpoolers replied "yes" to the second question, while 17 percent replied "no." The

main lane users were asked to consider the second question in two parts, one for vehicle utilization and one for person utilization. Thirty-one percent of the general purpose lane users thought the HOV lane was sufficiently utilized by vehicles; 41 percent thought the lane was insufficiently utilized, and 28 percent were unsure. In terms of person utilization, 25 percent of the general purpose lane drivers thought the lane was sufficiently utilized, 43 percent did not, and 32 percent were not sure (Stockton et al. 1997). These results bear striking similarities to those given by the Katy Freeway users, further confirming the conflicting views held by HOV users and nonusers about the effectiveness of HOV facilities.

2.1.7 I-394 Minneapolis, Minnesota

An HOV facility extends from downtown Minneapolis to the city of Wayzata, which lies to the west of the Minneapolis-St. Paul metropolitan area (Turnbull 1992a). An interim HOV facility was opened on I-394 in 1985, but the permanent facility did not open until 1991. There are two 3.4-mile reversible lanes that operate exclusively for buses, motorcycles, taxis, and vanpools and carpools of two or more people from 6:00 a.m. to 10:00 a.m. and from 2:00 p.m. to 8:00 p.m. Concrete barriers are used to separate the HOV lanes from the two general purpose lanes (each direction). Morning peak direction data that have been reported indicate that fifty-three buses carried 1,532 passengers and 1,138 vanpools and carpools served 2,344 travelers on the HOV lane, while 4,640 vehicles moved 4,918 people on the general purpose lanes during the peak hour. During the 3-hour peak period, eighty-three buses transported 1,990 passengers and 2,076 vanpools and carpools served 4,106 travelers on the HOV lane, while 12,824 vehicles moved 13,593 people on the main lanes (Turnbull 1992b).

In 1991, in addition to the reversible HOV lanes, a concurrent flow HOV lane was opened in each direction of I-394 (the two general purpose lanes remained for mixed traffic). The concurrent flow lanes are 7.6 miles long and are separated from the mixed traffic lanes by striping. The hours of operation — 6:00 a.m. to 9:00 a.m. and 3:00 p.m. to 6:00 p.m. — are shorter than those of the reversible HOV lanes. Morning peak direction data that have been reported indicate that forty-nine buses carried 1,415 passengers and 1,051 vanpools and carpools served 2,165 travelers on the HOV lane,

while 2,167 vehicles moved 2,297 people on the general purpose lanes during the peak hour (Turnbull 1992b).

2.1.8 Route 55 Commuter Lanes, Orange County, California

Route 55 connects residential communities in Orange and Riverside Counties with the employment centers located in central Orange County (Turnbull 1992a). Turnbull, Henk, and Christiansen (1991) reported that the first exclusive carpool facility in Orange County was on Route 55, which opened in 1985 as an 11-mile facility of concurrent flow HOV lanes. These lanes were initially part of a demonstration program sponsored by the Orange County Transportation Commission and the California Department of Transportation. The project was undertaken to determine the effect of the commuter lanes on the entire freeway facility in terms of utilization, travel times, safety, violations, and traffic volumes on parallel roadways. Additionally, the public reaction to the project was monitored.

The HOV facility still consists of one lane of concurrent flow in each direction. The lanes are separated from the three (each direction) general purpose lanes by striping. Transit and private buses, motorcycles, taxis, vanpools, and carpools of two or more members are permitted on these lanes 24 hours a day. Morning peak direction data that have been reported indicate that three buses carried fifty passengers and 1,295 vanpools and carpools served 2,687 travelers on the HOV lane, while 5,284 vehicles moved 5,665 people on the general purpose lanes during the peak hour. During the 2-hour peak period, five buses transported seventy passengers and 2,371 vanpools and carpools served 4,977 travelers on the HOV lane, while 10,009 vehicles moved 10,691 people on the main lanes (Turnbull 1992b).

2.1.9 I-5N Seattle, Washington

This facility, located north of downtown Seattle and the University of Washington, opened in 1983 and consists of one concurrent flow HOV lane in each direction. The northbound HOV lane is 6.2 miles long, and the southbound lane is 7.7 miles long. Striping separates the HOV lanes from the rest of the facility — four lanes in each direction. The carpool requirement was three, until July 1991, when it was changed to two (Turnbull 1992a). The HOV restriction remains in effect 24 hours a day. Morning

peak direction data that have been reported indicate that sixty-four buses carried 2,605 passengers and 1,196 vanpools and carpools served 3,039 travelers on the HOV lane, while 7,691 vehicles moved 9,476 people on the general purpose lanes during the peak hour. During the 3-hour peak period, 146 buses transported 5,810 passengers and 2,622 vanpools and carpools served 6,429 travelers on the HOV lane, while 20,721 vehicles moved 25,350 people on the main lanes (Turnbull 1992b).

2.1.10 I-5S Seattle, Washington

A concurrent flow HOV lane opened in each direction of I-5S in 1991. The northbound HOV lane is 5.6 miles long, while the southbound lane is 5.4 miles long. The lanes operate 24 hours a day for transit, school, and private buses, motorcycles, taxis, vanpools, and carpools of three or more and are delineated from the four general purpose lanes by striping. Morning peak direction data that have been reported indicate that twenty-eight buses carried 1,176 passengers and 400 vanpools and carpools served 1,320 travelers on the HOV lane, while 6,337 vehicles were on the general purpose lanes during the peak hour. During the 4-hour peak period, 1,050 vanpools and carpools served 3,465 travelers on the HOV lane, while 22,805 vehicles were on the main lanes (Turnbull 1992b).

2.1.11 I-90 Seattle, Washington

In 1989 a 4.6-mile concurrent flow HOV lane opened in the westbound direction of I-90. It is divided from the three main lanes by striping and operates 24 hours a day for transit, school, and private buses, motorcycles, taxis, vanpools, and carpools of three or more people. Morning peak direction data that have been reported indicate that thirty-four buses carried 1,250 passengers and 200 vanpools and carpools served 660 travelers on the HOV lane, while 6,070 vehicles moved 6,798 people on the general purpose lanes during the peak hour. During the 3-hour peak period, eighty-nine buses transported 2,890 passengers and 270 vanpools and carpools served 607 travelers on the HOV lane; 13,547 vehicles moved 15,053 people on the main lanes (Turnbull 1992b).

2.1.12 I-279 Pittsburgh, Pennsylvania

Two reversible lanes, located in the median, make up the HOV facility that opened in Pittsburgh in 1989 on I-279. The lanes are 4.1 miles long and are separated from the freeway general purpose lanes by concrete barriers. Originally, only transit, school, and private buses, taxis, vanpools, and carpools of three or more people were permitted on these lanes from 5:00 a.m. to noon and 2:00 p.m. to 8:00 p.m.; however, the carpool requirement was dropped to two people in August 1992 (Turnbull 1992a). Morning peak direction data that have been reported indicate that twenty-three buses carried 1,050 passengers and 845 vanpools and carpools served 1,527 travelers on the HOV lane, while 4,361 vehicles moved 5,001 people on the general purpose lanes during the peak hour (Turnbull 1992b). Motorcycles were permitted on the HOV lane in 1992 by federal law.

2.1.13 Other HOV Facilities

This section describes additional HOV facilities found in North America.

2.1.13.1 Barnet/Hastings Corridor, British Columbia. Bracewell et al. (1999) evaluated an HOV facility in the Barnet/Hastings corridor in British Columbia. The study area extended from Renfrew Street in Vancouver to Ioco Road in Port Moody. The construction was completed in the fall of 1996 and included upgrading the curb lane in some sections and widening the roadway in other sections. The westbound HOV lane is 11 miles long, and the eastbound lane is 9.3 miles long. The curb lane serves as the HOV lane in the peak direction during the weekdays from 6:00 a.m. to 8:30 a.m. (westbound) and from 3:30 p.m. to 6:00 p.m. (eastbound). The minimum vehicle occupancy is two.

Person throughput was evaluated using per-lane efficiency, average vehicle occupancy, and HOV market share. The HOV lane has increased the per-lane efficiency of the corridor. The major reason for the success in meeting this objective is that travel in the corridor increased, primarily as a result of the shift of trips from a parallel route. The average vehicle occupancy also increased in the corridor with the HOV facility, which could have occurred because of carpools, mode shift by transit users, or route shift. Bracewell et al. (1999) reported a slight increase in the HOV market share. These

authors also noted that the percentage of bus users decreased by 5 percent, while the percentage of carpool/vanpool users increased 6 to 8 percent.

Travel time savings were observed. Traveling westbound during the morning peak in 1997, HOV lane users saved 8.1 minutes over the general purpose lane users. During the afternoon peak in 1997, HOV lane users saved 2.8 minutes. The HOV lane travel time was determined to be more reliable than general purpose lane travel time.

Compliance rates were not as high as desired. The actual level of compliance was 79 percent (85 percent was the target level).

The impact on the general purpose lanes was evaluated by the travel speed on the general purpose lanes. The speeds have increased in both directions since the introduction of the HOV lane.

A cost-effectiveness evaluation was conducted based on the costs of construction and maintenance and the benefits of travel time savings. The conclusion was that the travel time savings in just the westbound direction would make the facility cost-effective (Bracewell et al. 1999).

2.1.13.2 I-30E East R.L. Thornton Freeway, Dallas, Texas. In 1991 a contraflow HOV lane opened in each direction of I-30E in Dallas. The westbound HOV lane is 5.2 miles long, while the eastbound lane is 3.3 miles long. A movable concrete barrier prevents the traffic from mixing with that of the main lanes. The hours of operation of the HOV lanes are from 6:00 a.m. to 9:00 a.m. and from 4:00 p.m. to 7:00 p.m. for transit, school, and private buses, motorcycles, taxis, and vanpools (Turnbull 1992b). Carpools of three or more were allowed on the HOV lane on October 7, 1991; two weeks later, the occupancy requirement was reduced to two persons (Stockton et al. 1997).

During 1996, the HOV lane served 13,423 person trips each day. In the morning peak hour, 3,535 people used the HOV facility — 67 percent were carpoolers, 1 percent were vanpoolers, and 32 percent were bus riders. The number of vehicles on the HOV lane during the morning peak hour was 1,261, which led to an average vehicle occupancy of 2.8. The violation rate for the entire 3-hour peak period was apparently only 0.9 percent (Stockton et al. 1997).

The numbers of vans and buses using the HOV lane have not varied appreciably since 1992, but an increasing trend has been observed since late 1995. The volume of cars on the HOV facility has been increasing since late 1994. Park-and-ride lot utilization has decreased 3 percent since the opening of the HOV lane. In the freeway corridor not having an HOV lane (South R.L. Thornton Freeway, Dallas, Texas), the park-and-ride lot utilization has increased 15 percent (Stockton et al. 1997). This observation, made of a facility operating under essentially controlled conditions, suggests that at least part of the gains in carpooling appear to come at the expense of transit ridership.

The average vehicle occupancy and peak hour lane efficiency were much higher for the HOV lane than for the freeway main lanes (see Table 2.8). In terms of increasing the person movement efficiency of the roadway, the East R. L. Thornton Freeway HOV lane was considered successful.

The accident rate for the East R. L. Thornton HOV lane for the October 1991 to December 1996 time period was 18.5 officer-reported injury accidents per 100 MVM. Prior to the opening of the HOV facility, the accident rate for the freeway was 22.6. The rate for the general purpose lanes after the HOV facility became operable was 28.0 injury accidents per 100 MVM (Stockton et al. 1997). Based on these values, the HOV lane has had a negative impact on the safety of the general purpose lanes, though the HOV facility itself operates at a safer level than the freeway did in the past.

The HOV lane users were able to save 6 minutes, on average, during the morning peak hour, compared to the freeway general purpose lane users. In addition to travel time savings, the benefits used to calculate the benefit-to-cost ratio included reductions in vehicle operating costs, fuel consumption, and accidents. The costs that were used encompassed construction, facility operation and maintenance, vehicle operation, and accidents. Assuming a 20-year project life, the benefit-cost ratio was calculated to be 29 (Stockton et al. 1997).

A public opinion survey was conducted by TTI in 1994. In response to the question, “Are HOV lanes good transportation improvements?”, 66 percent of the East R. L. Thornton Freeway general purpose lane users said “yes,” 20 percent replied “no,” and 14 percent were “not sure.” The freeway motorists were asked two additional questions.

Forty-eight percent of the respondents thought the vehicle utilization of the HOV lane was sufficient, while 32 percent did not and 20 percent were "not sure." In terms of person utilization, only 38 percent of the general purpose lane users thought the HOV facility was sufficiently utilized. Thirty-nine percent replied that the person utilization was insufficient, while 23 percent were "not sure." Of the bus riders, 62 percent believed the HOV lane was sufficiently utilized, while 13 percent did not and 25 percent were unsure. When carpoolers and vanpoolers were asked the question, "Is the HOV lane sufficiently utilized?", 95 percent said "yes" and 5 percent replied "no" (Stockton et al. 1997).

Table 2.8 Comparison of East R.L. Thornton Freeway HOV Lane and Main Lane Traffic Data (1996)

	HOV Lane		Freeway Main Lanes	
	A.M. Peak hour	Peak Period (3.0 hours)	A.M. Peak hour	Peak Period (3.0 hours)
Total person trips	3,535	6,975	7,749	21,143
Total vehicle trips	1,261	2,521	7,253	19,675
Average Vehicle Occupancy (persons/vehicle)	2.8	2.77	1.07	1.07
Lane Efficiency (1000s) (passengers x miles/hour)	198		50	

2.1.13.3 Summary of Various HOV Facilities. Table 2.9 provides the location, type of facility, number of HOV lanes, length of the HOV lanes, methods of separating the HOV facility from mixed traffic lanes, eligible users, and hours of operation for HOV facilities in North America that were not mentioned in previous sections.

Overall, HOV facilities have become reasonably well accepted in several large U.S. cities. However, public opinion regarding their effectiveness differs based on whether the respondent is a user or a nonuser. Assessment of the effectiveness of HOV facilities appears to have been generally overstated and not conducted in a rigorous manner vis-à-vis competing alternatives.

Table 2.9 Summary of HOV Facilities in North America

Facility	Year Implemented	Type	Length	Separation	Eligible Users	Hours
I-10 Phoenix, AZ	1987–1990	Concurrent (1 lane ea. direction)	17.0 mi	4 ft painted buffer	Buses, motorcycles, HOV2+	24
I-10 San Bernardino Freeway, Los Angeles, CA	1973, 1989	Exclusive (1 lane each direction)	12.0 mi	Barriers, striping	Buses, motorcycles, HOV3+	24
I-405 Los Angeles, CA	1989–1990	Concurrent (1 lane ea. direction)	24.0 mi	Striping	Buses, motorcycles, taxis, HOV2+	24
SR 91 Los Angeles, CA	1985	Concurrent (1 lane, EB only)	8.0 mi	Striping	Buses, motorcycles, taxis, HOV2+	24
SR 91 Riverside County, CA		Concurrent (1 lane ea. direction)	8.0 mi	Striping	Buses, motorcycles, taxis, HOV2+	24
I-5 Los Angeles area, CA	1992	Concurrent (1 lane ea. direction)	10.0 mi	Striping	Buses, motorcycles, taxis, HOV2+	24
SR 57 Los Angeles area, CA	1992	Concurrent (1 lane ea. direction)	10.0 mi	Striping	Buses, motorcycles, taxis, HOV2+	24
I-80 Bay Bridge, San Francisco Bay Area, CA	1970	Concurrent (4 lanes WB direction)	2.3 mi	Pylons	Buses, motorcycles, taxis, HOV3+	5:00–10:00 a m , 3:00–6:00 p.m.
US 101 Marin County, CA	1974, 1986–1987	Concurrent (1 lane ea. direction)	7.0 mi	Striping	Buses, motorcycles, taxis, HOV2+	6:30–8:30 a.m., 4:30–7:00 p.m.
US 101 Santa Clara County, CA	1986, 1988	Concurrent (1 lane ea. direction)	12 mi SB, 11 mi NB	Striping	Buses, motorcycles, taxis, HOV2+	5:00–9:00 a.m., 3:00–7:00 p.m.
Montague Expressway, San Francisco Bay area, CA	1982, 1984, 1988	Concurrent (1 lane peak direction)	5.0 mi	Striping	Buses, motorcycles, taxis, HOV2+	6:00–9:00 a.m., 3:00–7:00 p.m.
San Tomas Expressway, San Francisco Bay area, CA	1982, 1984	Concurrent (1 lane peak direction)	6.5 mi	Striping	Buses, motorcycles, taxis, HOV2+	6:00–9:00 a.m., 3:00–7:00 p.m.
SR 237, San Francisco Bay area, CA	1982, 1984	Concurrent (1 lane peak direction)	4.0 mi	Striping	Buses, motorcycles, taxis, HOV2+	5:00–9:00 a.m., 3:00–7:00 p.m.
US 36 Boulder Turnpike, Denver, CO	1986–1988	Concurrent, bus only (1 lane, EB only)	4.1 mi	Striping	Buses	6:00–9:00 a.m.
I-84 Hartford, CT	1989	Exclusive (1 lane ea. direction)	10.0 mi	15-17 ft painted buffer	Buses, motorcycles, taxis, HOV3+	
I-95 Miami, FL	1976–1990	Concurrent (1 lane ea. direction)	11.4 mi	Striping	Buses, motorcycles, taxis, HOV2+	7:00–9:00 a.m., 4:00–6:00 p.m.
SR 112 Miami, FL	1991	Concurrent (1 lane ea. direction)	1.2 mi	Striping	Buses, motorcycles, taxis, HOV2+	7:00–9:00 a.m., 4:00–6:00 p.m.
I-4 Orlando, FL	1980	Concurrent (1 lane)	30.0 mi	Striping	Buses, motorcycles, taxis, HOV2+	7:00–9:00 a.m., 4:00–6:00 p.m.
Moanaloa Freeway, Honolulu, HI	1978	Concurrent (1 lane, EB only)	2.5 mi	Striping	Buses, motorcycles, taxis, HOV2+	6:00–8:00 a.m.
H-1 Honolulu, HI	1987	Concurrent (1 lane ea. Direction)	8.0 mi	Striping	Buses, motorcycles, taxis, HOV2+	6:00–8:00 a.m., 3:30–6:00 p.m.
U of M Intercampus Busway, Minneapolis-St. Paul, MN	1992	Exclusive (1 lane ea. Direction)	1.8 mi	Separate ROW	Buses, bicycles	24
I-95 Fort Lee, NJ	1986	Concurrent (1 lane, EB only)	1.0 mi	Striping	Buses, motorcycles, taxis, HOV3+	7:00–9:00 a.m.
SR 495 Lincoln Tunnel, NJ/ NYC	1970	Contraflow (1 lane, inbound)	2.8 mi	Drop in cones	Buses	6:30–10:00 a.m.
Long Island Expressway, NJ/NYC	1971	Contraflow (1 lane, inbound)	4.0 mi	Drop in cones	Buses	7:00–10:00 a.m.
Gowanus Expressway, NJ/NYC	1980	Contraflow (1 lane, inbound)	2.0 mi	Drop in cones	Buses, taxis, vanpools	7:00–9:30 a.m.
South PatWay, Pittsburgh, PA	1977	Exclusive (1 lane ea. Direction)	4.1 mi	Separate ROW	Buses	24
East PatWay, Pittsburgh, PA	1983	Exclusive (1 lane ea. Direction)	6.2 mi	Separate ROW	Buses	24
I-64 Norfolk, VA	1992	Reversible (2 lanes)	8.0 mi	Concrete barriers	Buses, motorcycles, taxis, HOV2+	5:00–8:30 a.m., 3:00–6:00 p.m.
SR 44 Norfolk, VA	1992	Concurrent (1 lane ea. Direction)	3.3 mi	Striping	Buses, motorcycles, taxis, HOV2+	5:00–8:30 a.m., 3:00–6:00 p.m.
I-564 Norfolk, VA	1992	Concurrent (1 lane, EB only)	2.0 mi	Striping	Buses, motorcycles, taxis, HOV2+	3:00–6:00 p.m.
SR 520 Seattle, WA	1973	Concurrent (1 lane, WB only)	2.3 mi	Striping	Buses, motorcycles, taxis, HOV3+	24

Facility	Year Implemented	Type	Length	Separation	Eligible Users	Hours
I-405 Renton to I-90 Seattle, WA	1986	Concurrent (1 lane ea. Direction)	5.7 mi NB, 5.3 mi SB	Striping	Buses, motorcycles, taxis, HOV2+	24
I-405 Tukwila, Seattle, WA	1990	Concurrent (1 lane ea. Direction)	5.9 mi	Striping	Buses, motorcycles, taxis, HOV2+	24
I-95 Washington, D.C.	1985–1986	Concurrent (1 lane ea. Direction)	6.8 mi	Striping	Buses, motorcycles, taxis, HOV3+	6:00–9:00 a.m., 3:30–6:00 p.m.
Champlain Bridge, Montreal, Quebec, Canada	1978	Contraflow	4.3 mi	Cones	Buses	6:30–9:30 a.m., 3:30–7:00 p.m.
Ottawa Transitway, Ontario, Canada	1982–1989	Exclusive (1 lane ea. Direction)	15.4 mi	Separate ROW	Buses	24
H-99 Vancouver, B.C. Canada	1980	Concurrent (1 lane ea. Direction)	4.0 mi NB, 1.0 mi SB	Striping	Buses	24

Source: (Turnbull,1992b).

2.2 SPECIAL PROGRAMS

This section describes special programs used with HOV facilities. The sticker program in Boston, Massachusetts, is described in the first part. In the second subsection, the QuickRide program in Houston, Texas, is outlined.

2.2.1 Sticker Program

On November 15, 1995, a contraflow HOV lane was opened on the I-93 Southeast Expressway in Boston, Massachusetts. The HOV facility is 6 miles long and extends from Furnace Brook Parkway to Freeport Street. Concrete barriers are used to separate the HOV lane from the mixed traffic lanes. The facility operates in the northbound direction from 6:00 a.m. to 10:00 a.m. and in the southbound direction between 3:00 p.m. and 7:00 p.m. on weekdays. Buses, motorcycles, and carpools and vanpools of three or more travelers are permitted on the HOV lane (MassHighways 1999).

The Massachusetts Highway Department (MassHighways) observed under-utilization of the HOV facility and estimated that an additional 2,000 vehicles could use the lane without affecting the level of service. Certain two-person carpools were allowed to use the facility on an alternating odd-even day basis. The program began on September 23, 1996, and allowed 4,000 free windshield stickers to be issued to two-person carpools. The evaluations conducted by MassHighways indicated that the volume

of traffic on the HOV lane has increased since the onset of the sticker program but the level of service has not declined (Goodman et al. 1998).

Enforcement of the HOV lane is provided by the Massachusetts State Police. Citations with a $50.00 fine are issued to violators. The State police, in conjunction with video cameras and radar detectors, have incident detection and response duties (MassHighways 1999).

2.2.2 QuickRide

When the vehicle-occupancy restriction for the HOV lane was raised from 2+ to 3+ during certain time periods, the congestion on the Katy HOV lane in Houston, Texas, decreased significantly, to the point where the facility was underutilized. The Texas Department of Transportation (TxDOT) and Houston METRO were unable to return the facility to its desired target utilization level until the advent of electronic toll collection technology and federal support from the Intermodal Surface Transportation Efficiency Act (ISTEA). The QuickRide program was developed for the Katy HOV lane with the goal of increasing person-movement and average vehicle occupancy while minimally impacting the HOV and general purpose lane conditions. The program opened to the public on January 26, 1998 (Smith 1999).

Shin and Hickman (1999) described the use of the QuickRide program, which encompasses priority lane pricing on the Katy HOV facility. This program allows up to 600 carpools with only two travelers to use the facility for $2 during the peak period when the HOV lane is otherwise restricted to vehicles with at least three people. The periods during which the toll is charged for the two-person carpool are 6:45 a.m. to 8:00 a.m. and 5:00 p.m. to 6:00 p.m. During the rest of the time, there is no charge for the HOV2s (Shin and Hickman 1999).

The price of implementing the QuickRide program was relatively low because it relied on existing resources. The enforcement for the project is handled by METRO police, who already had the responsibility of monitoring the exits of the HOV lane. Toll collection equipment for the roadway did not need to be purchased because transponder readers were already in place for collecting speed data (Smith 1999).

To evaluate the program, four analyses were conducted. The first addressed the daily use of QuickRide, which was measured by total and peak hour use, day of week, time of day, and the normal weekly frequency of use. Shin and Hickman (1999) reported the total enrollment and number of daily users to be significantly lower than anticipated and suggested that one reason for this result was that creating and keeping a two-person carpool is difficult. The morning use was nearly 33 percent higher than the evening use, which is not surprising because the morning period is longer. Monday has the fewest number of users during both periods, while Thursday has the highest number of morning users and the second fewest amount of evening users. Friday has the most evening users. Evaluation of the time of day revealed more flexibility in the choice of departure time than was expected. The frequency with which the QuickRide program is used was low — only about 25 percent of the participants used their tags on a given day, suggesting that people like to have the option to use the program, the toll is too high for everyday use, or the two-person carpool is difficult to maintain (Shin and Hickman 1999).

The second analysis evaluated changes in travel mode and facility. To obtain data, the participants in the program were asked "how many times per week they normally commuted by (a) single-occupant vehicle (SOV) on the main lanes, (b) carpool or vanpool on the main lanes, (c) carpool/vanpool on the HOV lane, (d) bus on the HOV lane, or (e) other" (Shin and Hickman 1999). The responses were tested against the observed QuickRide usage. Roughly 25 percent of the trips on a given day were previously made by single-occupant vehicles. At most, 5 percent of the trips were previously made by bus, vanpools, or carpools of three or more persons. The remaining number of users were HOV2s that previously used the main lanes or other routes or traveled at different times (Shin and Hickman 1999).

The results of the third and fourth analyses indicated that the number of QuickRide users was too small to have a significant impact on either the HOV lane or general purpose lanes. Travel speed and travel time savings were addressed by the third analysis. There has not been a noticeable effect on the speeds of either the HOV lane or the general purpose lanes. Person throughput was the focus of the fourth analysis. Again, since the usage has been low, there has not been a significant change (Shin and Hickman 1999).

For the future, Shin and Hickman (1999) recommended that the toll be lowered; the number of allowed participants be raised; and the program and its potential time savings be marketed to a greater extent.

2.3 PRICING

Fielding (1994) investigated congestion pricing in southern California from the public acceptability perspective. He suggested that obstacles to congestion pricing could be overcome by simultaneously expanding HOV lanes and ride sharing programs. The problem in southern California, as in many other areas of the United States, is that household incomes have increased, allowing for increased car ownership. The road capacity has not been able to keep up with the growing demand, thus augmenting the congestion.

Improvements have been made to the mass transit system in the past, but there is still not a high incidence of use in nonurban areas. Like several others, Fielding (1994) noted that the HOV lanes are fully used in the peak part of the peak period, but during the other part of the peak period, these lanes are less congested than the main lanes. As a result, the HOV facilities have been criticized and illegally used. The requirement for classification as an HOV was also dropped from three people to two in many areas, resulting in increased traffic on the HOV lanes. One way to handle the congestion and still be relatively fair to current users would be to raise for-free travel to HOV3 while allowing single-occupancy vehicles (SOV) and HOV2 to pay for the use of the road (Fielding 1994). Avoiding the toll should encourage the use of HOV3 and buses, which would lower the congestion on the HOV facilities. Allowing SOVs on the facility for a price would also lower the congestion on the main lanes. The groups that Fielding identified as “losing” in this situation are HOV2s traveling with family members and highway interest groups such as trucking associations.

2.3.1 Route 91

Fielding (1994) reported that the California Private Transportation Corporation (CPTC) was granted permission by the state to plan, build, and operate four tolled lanes (two in each direction) in the median of Route 91. CALTRANS had originally been planning to construct HOV lanes in the median and had received environmental

clearance, but was unable to obtain the funding needed. The private funds would allow the project to move forward, but under a private corporation.

To recover the expenses, CPTC charges tolls. So that people will be willing to pay for the use of the roadway, CPTC must be able to maintain a lower travel time on its roadway, compared to the eight main lanes. The tolls will be varied in response to demand and based on the value of time saved, approximately $0.22/min. The technology used on this roadway incorporates automatic vehicle identification, automatic toll collection, and changeable message signs (Fielding 1994).

The facility, named Express Lanes, opened in December 1995. The lanes are 10 miles long. Originally, vehicles with three or more occupants were allowed to use the facility for free, but these vehicles have been charged a half-toll since January 1, 1998. Between December 1995 and September 1997, the toll rates increased three times. The toll schedule from late 1997 showed a range from $0.60 to $2.95. The tolls are collected electronically via transponders issued either by CPTC or by another toll authority that uses the California AVI standard (Goodman et al. 1998).

Enforcement is also performed electronically. License plates are recorded as the vehicles pass spotter booths near the midpoint of the facility. Violators are issued citations by mail or by the California Highway Patrol. Evaluation of traffic on the general purpose lanes by CALTRANS indicated improved conditions during the peak hour. The average delay prior to implementation of the Express Lanes was 30 to 40 minutes. This delay was reduced to 5 to 10 minutes (Goodman et al. 1998).

Researchers at the California Polytechnic State University are also monitoring traffic conditions on SR 91 and conducting opinion surveys of the Express Lane users. Results from the surveys revealed that only approximately 55 percent of peak period Express Lane travelers use the facility more than once a week. The demographic information gathered from the surveys indicated that Express Lane users and nonusers had similar characteristics. Approval of variable tolls has increased with the age of the project (Goodman et al. 1998).

2.3.2 I-15

In 1988, two barrier-separated, reversible, high-occupancy vehicle (HOV) lanes were opened in the median of I-15 in San Diego County, California. These lanes, called Express Lanes, are 8 miles long with access only at the end points — the Ted Williams Parkway/S.R. 56 or I-15 at the north end and S.R. 163 or I-15 at the south end. The hours of operation were 5:45 a.m. to 9:15 a.m., southbound, and 3:00 p.m. to 7:00 p.m., northbound. During the remaining hours of the day, the facility was closed to all traffic. The vehicles permitted to use these lanes were carpools, vanpools, buses, and motorcycles, but with this combination of vehicles, excess capacity remained. To make use of this extra space, the I-15 Congestion Pricing Project, which began in December 1996, allows single- occupant vehicles (SOVs) to use the Express Lanes for a fee. The vehicles that were previously granted access to the HOV lanes continue to use the facility for free.

Figure 2.2 shows the location of the I-15 Congestion Pricing Project. The area labeled FasTrak contains the Express Lanes.

Once the legislation and funding were established and the various agencies coordinated, the project could proceed. The purpose of the project is to increase the efficiency of the roadway. Secondary to this purpose are the goals of improving transit and HOV service, relieving I-15 main lane congestion, providing an incentive for ride sharing, and improving air quality (Wilbur Smith Associates 1996). Since the I-15 Congestion Pricing Project was the first to test congestion pricing on an existing HOV facility in the United States, impacts on safety, public opinion, land use, local businesses, bus ridership, truck use, park-and-ride lot use, and air quality were monitored continuously. Interstate 8 was used as a control corridor so changes that were area-wide would be identified and not incorrectly attributed to the congestion pricing project.

2.3.2.1 Project Background. This section describes the agencies involved, funding, and legislation that were instrumental in implementing the I-15 Congestion Pricing Project.

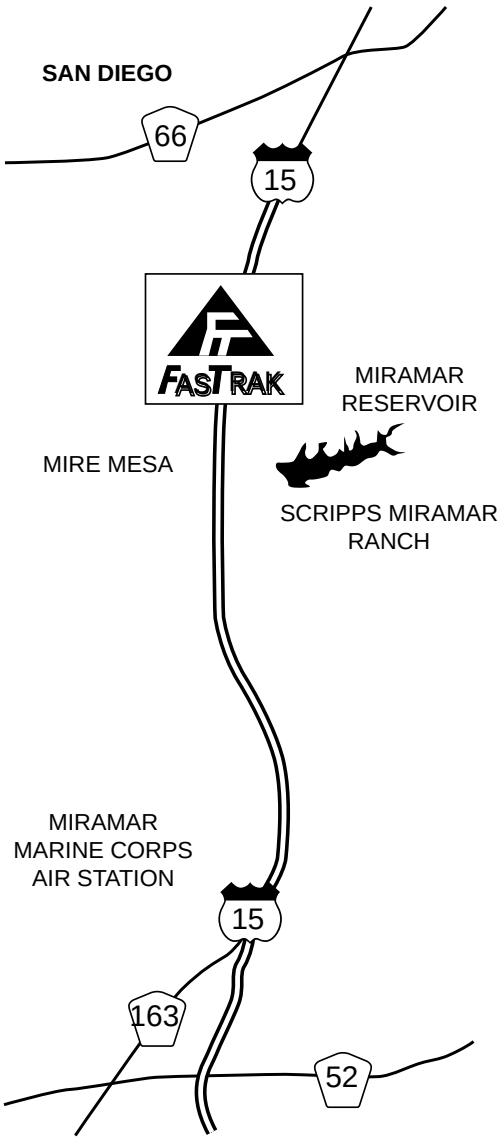

Source: I-15 FasTrak Online 1999

Figure 2.2. Location of I-15 Congestion Pricing Project

Agencies Involved. The I-15 Congestion Pricing Project required the cooperation of numerous groups, including the San Diego Association of Governments (SANDAG), California Department of Transportation (CALTRANS), San Diego Metropolitan Transit Development Board (MTDB), California Highway Patrol (CHP), and Federal Highway

Administration (FHWA). SANDAG was the project manager and CALTRANS was the primary partner. The CHP provided enforcement for the Express Lanes. Transit service improvements were the responsibility of MTDB. A project management team was established and was composed of SANDAG, FHWA, the Federal Transit Administration (FTA), CHP, MTDB, Assemblyman Jan Goldsmith's office, and the Cities of San Diego and Poway (Schreffler, Golob, and Supernak 1998).

The interaction of the FHWA, CALTRANS, and SANDAG was very important for the transfer of funds. An agreement was created between FHWA and CALTRANS so that federal money could be given to the state. A second agreement between CALTRANS and SANDAG was needed to transfer the funds from the state to the local agency (Schreffler, Golob, and Supernak 1998).

Funding. The majority of the funding ($7.96 million) was provided by the Federal Highway Administration through a Congestion Pricing Pilot Program (Value Pricing Program) grant. Another $2 million came from local funds and $230,000 from the Federal Transit Administration. The Intermodal Surface Transportation Efficiency Act (ISTEA) of 1991 created the Congestion Pricing Pilot Program. Before 1995, the I-15 project did not meet the criteria for this grant, but the requirements were revised to include high-occupancy/toll (HOT) lane projects (Schreffler, Golob, and Supernak 1998).

Legislation. In order for the I-15 Congestion Pricing Project to be authorized, key legislation had to be enacted. State legislation had to be created to allow single occupant vehicles to use the Express Lanes for a fee. Assembly Bill 713, passed in October 1994, was the enabling legislation but contained the restriction that the level of service (LOS) for the Express Lanes must remain at its original state, which was determined to be LOS C. The other requirement was that project revenue be used for improving transit service and the HOV facility (Schreffler, Golob, and Supernak 1998).

Other legislation already in existence had to be followed carefully. The California Code of Regulations, Title 21, Public Works, Chapter 16, *Compatibility Specifications for Automatic Vehicle Identification Equipment,* requires electronic toll

collection methods to be compatible with all other electronic toll collection systems currently being used in the state (Wilbur Smith Associates 1997).

2.3.2.2 Project Phases. The I-15 Congestion Pricing Project was implemented in two primary phases.

Phase 1: Implementation Planning, Interim Implementation and Technology Design (December 1996 – March 1998). To begin the congestion pricing project in December 1996, the ExpressPass system was developed. During this phase, participants bought monthly passes and were granted an unlimited number of trips on the Express Lanes. The permits were displayed on the front windshield of the vehicle and varied in color from month to month. Fifty dollars was the initial cost of a permit, but the price was changed to $70 after three months (Wilbur Smith Associates 1997). Further price increases were prevented by strong public reaction.

It was determined that the maximum number of participants allowed would be one thousand. This number was derived from traffic counts and the limits on traffic for level of service C from the *Highway Capacity Manual*. During the first month, 500 customers were allowed to purchase passes. They were required to pay at least one month in advance and had the option of paying by credit card, check, or money order. Three accounts were allowed per household or business (Wilbur Smith Associates 1996).

After September 1997 colored permits were no longer used. Program participants were issued automatic vehicle identification transponders. This part of the project still required users to pay a monthly fee for unlimited trips on the Express Lanes.

Phase 2: Full Implementation (March 1998 – December 1999). The second phase, named FasTrak, began in March 1998. At this time actual congestion pricing was implemented. Tolls were charged per trip and allowed to vary with the amount of congestion on the Express Lanes. The normal range of fees was $.50 to $4, but charges of up to $8 were permitted in the case of severe congestion. Changeable message signs were used to post the current toll.

Program participants were allowed to use credit cards, checks, or money orders to establish pre-paid accounts. Each time the Express Lanes were used, the account was debited. Those using credit cards authorized automatic replenishment of their accounts

when the balance reached a minimum amount. Accounts paid with checks or money orders were required to maintain a positive balance (Hultgren and Kawada 1999).

2.3.2.3 Toll Collection Procedure. No plaza was constructed for toll collection. Instead, all tolls are collected electronically. The toll concept that was selected has a separate lane for all SOV traffic in the vicinity of Miramar Way and Miramar Road. In this area, there are two lanes for HOV traffic and one lane for SOV traffic. When the facility is operating in the southbound direction, the SOV traffic is directed to the left, and when the facility operates in the northbound direction, SOV traffic moves to the right lane. Video cameras were mounted over each lane and toll collection equipment was placed over the SOV lane.

As the vehicle approaches the toll collection zone, the electronic toll collection antennae read the transponder on the windshield. If no transponder is present, the video camera records an image of the license plate. The video cameras over the HOV lanes are activated only if an observer witnesses an SOV in one of the HOV lanes (Wilbur Smith Associates 1997).

To determine the amount of the toll, tables are used. Data is collected from loop detectors every 6 minutes. Two consecutive counts are added together and then compared to tables, which list prices according to the amount of traffic and time of day. An excerpt of the morning table is provided in Table 2.10. The toll is then displayed on message signs (Hultgren and Kawada 1999).

Table 2.10 Example of Maximum Toll Levels and Volume Thresholds for Toll Rate Look-Up for the Weekday Morning Peak Period (effective Aug. 31, 1998)

12-minute volume lower threshold	Equivalent 6-minute average volume	LOS	Rate	Time period
<200	<100	A	$0.50	5:30–6:00 A.M., 9:00–9:30 A.M.
200	100	A	$0.75	5:30–6:00 A.M., 9:00–9:30 A.M.
300	150	B	$1.00	6:00–6:30 A.M., 8:30–9:00 A.M.
380	190	B	$2.00	6:30–7:00 A.M., 8:00–8:30 A.M.
490	245	C	$4.00	7:00–8:00 A.M.

Source: Hultgren and Kawada 1999

2.3.2.4 Technical Performance of the Toll Collection Equipment. The technology employed to collect the tolls electronically did not perform as well as anticipated. MFS Transportation Systems, Inc., provided the electronic toll collection equipment for the first phase of the project. The system included a toll zone computer, central processing computer, lane controller, inductive loop detectors, automatic vehicle identification (AVI) system, internal and external transponders, uninterrupted power supply, and communication equipment such as a modem and telephone line. The AVI antennae and readers were located above the Express Lanes on the Miramar Way overpass. The proposal from MFS indicated that the mean time between failures would be 50,000 hours and that the mean time to repair the equipment would be less than 2 hours, but the system failed four times between September and December 1997. Each of these failures lasted more than one day. When the system was operational, vehicle counts and ExpressPass transponder reads were accurate (Supernak and Kaschade 1998).

2.3.2.5 Enforcement. The California Highway Patrol (CHP) was contracted to provide additional enforcement of traffic on the Express Lanes during the course of the I-15 Congestion Pricing Project. SANDAG and the CHP finalized a Police Services Agreement in late November 1996 and the CHP began enhanced enforcement when ExpressPass operations started on December 2, 1996. The officers involved with the additional enforcement volunteered for the overtime. One hundred thousand dollars was budgeted for enforcement during Phase 1 (Schreffler 1998). A total of $300,000 was allotted for the time period December 1996 through December 1999 (Supernak and Kaschade 1999).

Different levels of enforcement were used; level one required officers five days a week, level two for three days a week, and level three two days per week. Motorcycles were considered highly important because of their superior maneuverability as compared to patrol cars. Violators were identified by visually inspecting the vehicle for single occupancy and lack of permit or transponder (Schreffler 1998).

Prior to the implementation of the ExpressPass/FasTrak project, single-occupant vehicles were using the Express Lanes illegally, risking a $271 fine (Supernak and Kaschade 1999). Wilbur Smith Associates (WSA) conducted pre-project vehicle

occupancy counts in October 1996. During Phase 1, WSA performed manual counts of high-occupancy vehicles, ExpressPass users, and single-occupant violators. Based on the data collected, the violation rate decreased from 15 percent to approximately 2 percent of the total traffic on the I-15 Express Lanes. The CHP did not significantly increase the number of citations, but the increased presence of CHP officers was thought to deter would-be violators (Schreffler 1998).

For Phase II of the project, the CHP continued to visually inspect vehicle occupancy. Higher levels of enforcement were deployed for project milestones, such as the switch from the ExpressPass system to the FasTrak system. Video cameras were installed over the Express Lanes during the FasTrak phase for the purpose of recording violators, but not for giving citations. A slight increase in violation rates was noted for Phase II compared to Phase I, but this increase was not statistically significant (Supernak and Kaschade 1999).

2.3.3 Project Impact Studies

The following sections address eight areas where the congestion pricing project may have an impact. Section 2.3.3.1 focuses on the safety of the roadway. Section 2.3.3.2 addresses public opinion. Section 2.3.3.3 presents the results of land use studies. Section 2.3.3.4 describes the impact on local businesses. Section 2.3.3.5 focuses on bus ridership. Section 2.3.3.6 presents the effects of the project on truck usage. Section 2.3.3.7 gives a description of how park-and-ride lot utilization has been influenced. Finally, section 2.3.3.8 addresses air quality impacts.

2.3.3.1 Safety. Safety was a concern for all agencies and drivers involved with the I-15 Congestion Pricing Project. From California Highway Patrol traffic accident reports, accident data from 1988 to 1996 was obtained for both I-15 and I-8. The data available did not distinguish between accidents on the Express Lanes and the I-15 main lanes. Statistical analysis revealed that there was no difference between accident rates on I-8 in the morning and I-8 in the afternoon, I-15 a.m. and I-8 a.m., or I-15 p.m. and I-8 p.m. The frequency of accidents on I-15 was higher during the afternoon peak period than during the morning peak period. Since 1997 accident data was not available and

accidents are generally rare, no determination of the impact of the I-15 Congestion Pricing Project could be made (Supernak et al. 1998b).

2.3.3.2 Public Opinion. Public opinion has been gauged in two manners. The first was through the media. The second was by means of a survey.

The Media. The media were of great importance to the I-15 Congestion Pricing Project. In addition to changeable message signs, Internet messages, public service announcements, and newsletters, press releases were used to make information available to the public. Supernak, Kaschade, and Kelley (1998) were unable to reach a conclusion as to whether the printed and electronic media influenced public opinion regarding the I-15 Congestion Pricing Project. The media coverage for 1996 and 1997 primarily provided information about the project including an overall project description, the fact that revenue would be used for transit, the price or price changes, enforcement, and the traffic history and statistics. Positive printed editorials focused on the new transit that was funded by the project and the ExpressPass users' satisfaction. Negative printed opinions included disapproval of the project concept and the designation of the Express Lanes as an HOV facility. For the electronic media, positive opinions voiced general support for the program, while negative opinions focused on price and the elitist character of the project ("Lexus Lanes"). Overall, media coverage was accurately informative and balanced in opinion.

Surveys. To directly measure the public opinion, several types of surveys were conducted. Godbe Research and Analysis (1997) conducted several focus groups. In July 1997 four discussions were held. The groups were separated into four categories: current ExpressPass users (CEU), prior ExpressPass users (PEU), HOV users, and SOV users. Opinions about the project image varied across the groups: CEU respondents held the most favorable view, HOV participants reported not being impacted by the program, the PEU group gave a negative opinion of the project, and the SOV users frequently changed their minds. Reasons identified across the groups for using the Express Lanes were a reduction in stress, time savings, and increased safety. Initial opinion about dynamic per-trip tolls was negative across all groups and was associated with price gouging.

Attitudinal panel studies were also undertaken in the fall of 1997. Telephone surveys of 1,500 commuters were conducted. Three groups of people were identified — current and prior ExpressPass users, I-15 solo drivers and carpoolers, and I-8 solo drivers and carpoolers. These surveys revealed a substantial lack of knowledge about the program unless the interviewee was a program participant. ExpressPass users were more likely to be enthusiastic about the project than anyone else. The majority of the people interviewed indicated that the program was successful (Golob 1998).

Another round of focus group discussions was held in August 1998 by Godbe Research and Analysis (1998). The four groups were FasTrak users who made at least eight trips per week (full-time), FasTrak users who made less than eight trips a week (part-time), HOV users, and SOV users. Full-time users were highly satisfied with the FasTrak program, and all participants agreed that variable pricing was preferable to the flat fee of the ExpressPass program. The part-time users expressed some concern about the cost of using the Express Lanes. In addition to the reasons given in the 1997 discussions, flexibility was identified as a reason to use FasTrak. Cost and the relatively short length of the lanes were cited as negative aspects of the project.

2.3.3.3 Land Use. Potential impacts of the I-15 Congestion Pricing Project include the land use along the corridor. Supernak, Guzik, and Golob (1998) developed a methodology to evaluate the influence of the project on residential development. The ideal development locations for the I-15 corridor were between Penasquitos Blvd./Poway Road and SR 78. For the control corridor, I-8, the housing was ideally located between Greenfield Drive and South Grade Road. The homes considered for both corridors were to be within 3 miles of the freeways. A desired characteristic of the developments was that they should have sold at least sixty units in 1997 because the congestion pricing project began in December 1996. The types of homes considered were single-family houses and condominiums. The impact of the project on land use was determined by a survey that was distributed door-to-door and collected a few hours later.

Modifications to the desired criteria had to be made to increase the sample size; the target size was one hundred homes for each corridor. The distance from the freeway requirement was extended to 8 miles for the I-15 corridor. The requirement of having

sold at least sixty units in 1997 was dropped as were condominiums as a housing type. The surveys were distributed on the weekends of June 1998 (Supernak et al. 1999b).

Two interesting results were determined from the survey. The first was that the demographic characteristics of the I-8 residents were different from those of the I-15 residents. Of the people who answered the survey, the most common age range for I-15 was 35 to 44, while the majority of respondents for I-8 were between 25 and 34 years old. The household incomes were also different for the two corridors; the majority of I-15 households earned more than $100,000 while the range of $60,000 to $80,000 was the most common for I-8 households. The second important result was that the existence of the ExpressPass/FasTrak program was of secondary importance to choosing a housing location; the primary influences were the quality of the neighborhood, design of the house, cost, and size of the home and yard (Supernak et al. 1999b).

2.3.3.4 Local Businesses. Golob et al. (1998) conducted the first wave of evaluation of the impact of the I-15 ExpressPass/FasTrak on local businesses in September and October 1997. They conducted a telephone survey of businesses randomly selected from the Pacific Bell Yellow Pages. The preliminary findings of the first wave of surveys were that awareness of the ExpressPass project among the business community was low, the program was not considered to be significant to the businesses' employees, customers, or operations, and the impact of the project was believed to be slight or none.

2.3.3.5 Bus Ridership. The first wave evaluation of the impact of the ExpressPass program on bus use was conducted by Supernak and Syed in the fall of 1997. Using ridership data supplied by the San Diego Metropolitan Transit Development Board and the San Diego County Transit System, Supernak and Syed (1998) obtained three preliminary findings. The first was that overall bus ridership along the I-15 corridor was increasing steadily, but the routes using the Express Lanes experienced a slight decrease in passengers between the fall of 1996 and the fall of 1997. The second observation was that ridership was increasing in the San Diego region. Finally, because of the limited

amount of data available, no conclusions could be reached about the impact of the Congestion Pricing Program.

The Inland Breeze (Route 990) was initiated by funds collected from project participants. Buses for this route started running in November 1997 and use the Express Lanes during the peak period and the main lanes during the off-peak period. Route 990 connects with the trolley station at San Diego's Fashion Valley Transit Center. The buses operate with headways of 30 minutes during the peak and 60 minutes during the midday off peak. The desired ridership was 750 passengers per day, but in August, September, and October 1998, ridership ranged from 475 to 550 passengers per day. Peak ridership was found to be in the reverse-commute direction (Hultgren and Kawada 1999).

2.3.3.6 Truck Usage. Supernak, Kaschade, and Koesoemawiria (1998) conducted the first evaluation of the impact of the congestion pricing project on truck use in September and October 1997. To obtain data, the main lanes of I-15 and I-8 were monitored during the midweek and the vehicles were classified as passenger cars, light trucks, heavy trucks, public transit buses, and motorcycles. The result of the categorization was that trucks compose less than 3 percent of the total vehicles on both I-15 and I-8. Limited availability of data precludes specific conclusions regarding the impact of the I-15 Congestion Pricing Project on truck use.

2.3.3.7 Park and Ride Lot Utilization. The first wave evaluation of the use of park and ride lots was conducted on two consecutive midweek days in the fall of 1997 by Supernak et al. (1998a). The number of occupied parking spaces in each park and ride lot was counted and percent utilization calculated for both the I-15 and I-8 corridors. Four main conclusions were drawn from this data. The first is that the occupancy rate varies significantly from lot to lot, along both corridors. The second conclusion is that the daily variation in occupancy rate for an individual park and ride lot is insignificant. Third, the occupancy rates for the I-15 corridor have been stable with an average of 40 percent. Finally, there has been a significant decline in utilization of the I-8 corridor, from 30 percent in May 1996 to 16 percent in September/October 1997.

Additional evaluation waves were conducted in spring 1998 and fall 1998. Supernak et al. (1999a) presented the results of these two studies and compared them to the data acquired in 1996 and 1997. Park and ride usage along I-15 increased significantly from an average of 41 percent to 46 percent in 1998. Lot occupancy also significantly increased along I-8 during 1998 (16 percent in fall 1997 to 23 percent in fall 1998), possibly due to increases in traffic volume. The use of the park and ride lots for I-15 has been more constant than for I-8. Occupancy rates have not varied significantly with day or season. Fluctuations in usage have not been significantly different for lots serving express buses and those serving only local buses. Because of the observational nature of the study, the increase in occupancy rates is not necessarily attributable to the FasTrak program.

2.3.3.8 Air Quality. Total emissions of four major pollutants were estimated by Kazimi, Supernak, and Koesoemawiria (1998) for the peak hours in the I-15 and I-8 corridors: volatile organic compounds, nitrogen oxides, particulate matter, and carbon. The four issues to consider when calculating total emissions are emission factors, average speeds, number of vehicles, and length of roadway. The emission factors were determined from the California Air Resources Board's EMFAC7G model Version 7G. Traffic data collected by Wilbur Smith Associates and the San Diego State University team provided the average speeds and total vehicle counts.

The results of the study revealed an increase in all four pollutants along both I-15 and I-8. Kazimi, Supernak, and Koesoemawiria (1998) attributed the increase in emissions on I-15 to increased traffic from 1996 to 1997. During the morning peak period, the total emissions for the I-15 main lanes remained fairly constant, but during the afternoon peak, volatile organic compounds, nitrogen oxides, and carbon monoxide concentrations increased and particulate matter decreased. The Express Lanes demonstrated a greater change in total emissions due to the increased traffic and higher speeds. Total emissions increased by 25 percent in the morning peak period and 6 percent in the afternoon peak. Interstate 8 also experienced an increase in daily traffic, and, as a result, total emissions increased by 18 percent in the morning peak and 12 percent in the afternoon peak from 1996 to 1997.

2.3.4 Conclusions

The project has been fairly successful. The cost of delay is an important factor in determining the success of the project. As congestion is reduced, the cost of delay decreases. Two factors — the extra time spent traveling, compared to free-flow conditions, and value of time — are used to calculate delay costs. Traffic data from 1997 was used to calculate the cost of delay on I-15 and the control corridor I-8. The results were $4.27 million along I-15 and $1.39 million per year along I-8. Some of the reasons for the significantly higher value for I-15 are the higher traffic volumes and higher household incomes. Between the fall of 1996 and the fall of 1997, the delay for I-15 decreased by 18 percent, while the delay increased by 14 percent on I-8 (Kazimi, Supernak, and Koesoemawiria 1998).

In addition to the decrease in delay costs, other criteria for judging the project successful appear to have been met. The total number of vehicles using the HOV facility increased, while there was a decrease in the number of vehicles using the main lanes. Revenue gathered from the ExpressPass system allowed for the creation of a new express bus route. Violations by SOVs decreased. The impacts on land use and local businesses have been low. Park and ride lot utilization increased. Unfortunately, air quality has not improved. Finally, the public opinion of the project has been generally positive.

Several important lessons can be learned from the work done in San Diego. First, easing into congestion pricing is a good idea. Many people interviewed in the San Diego area initially expressed concern about paying on a daily basis, but as the project has progressed, there have been few complaints. The evolution of the project into congestion pricing allowed people to become accustomed to the idea of paying to use the facility. Per-trip pricing allows more people to have the opportunity to use the facility and may help with equity issues. The second important lesson is that information dissemination to the public could be a problem, notwithstanding the use of a variety of media. Experience with the I-15 project indicated that congestion pricing for the HOV facility is likely to have little effect on transit ridership and is unlikely to improve air quality perceptibly. Finally, the toll revenue was not as high as anticipated.

Two characteristics have been important in the apparent success of the I-15 Congestion Pricing Project: the existence and under-utilization of HOV facilities and

main lane congestion. These two qualities should be present in any area before agencies consider similar projects. Table 2.11 shows the 1995 traffic volumes of I-15 and the 1996 traffic volumes of various facilities in Texas. The traffic volumes are much higher on the single HOV lanes in Houston than on a single lane of the I-15 HOV facility.

The differences between the I-15 Express Lanes and the facilities in Houston, Texas, limit the direct transferability of the Californian experience to Texas. The relatively high volumes served by the HOV lanes in Texas indicate that there is limited excess capacity during the peak hour. The Gulf Freeway and the Katy Freeway are the two exceptions that might be appropriate for a congestion pricing plan. Currently, a study is being conducted on the Katy Freeway allowing HOV2s to "buy into" the facility during the peak hour, which is otherwise restricted to HOV3s. The lower congestion on the main lanes may cause the time savings of using the HOV facility to be lower in Texas than California. There are significantly more exits and entrances to the HOV facilities in Houston than San Diego. For this reason, a distance-based toll might be better received than a flat toll as employed for I-15.

Table 2.11. Comparison of HOV Facilities

Facility	HOV Lane Length (mi)	Number of HOV Lanes (Number of access points)	Peak Hour HOV Lane Volume (veh/lane)	Peak Hour Main Lane Volume (veh/lane)
I-15 San Diego, CA	8.0	2 (2)	897	1,488
Katy (IH 10) Houston, TX	13.0	1 (5)	916	1,577
North Freeway (I-45N) Houston, TX	13.5	1 (6)	1,338	1,922
Gulf Freeway (I-45S) Houston, TX	12.1	1 (5)	799	1,531
Northwest Freeway (US 290) Houston, TX	13.5	1 (6)	1,429	1,853
Southwest (US 59S) Houston, TX	12.2	1 (7)	1,315	1,710

Sources: Wilbur Smith Associates (1997) and Stockton et al. (1997)

Congestion pricing has a good chance of success in Texas, but some changes would have to occur. A toll project such as the one in San Diego would need a political

champion, which may be difficult to find in Texas, but as traffic continues to be a major concern, the likelihood of finding one increases. Greater use of the HOV lanes in Texas may dictate a need for a change in the occupancy requirement, which would lead to under-utilization of the facility at times. During these periods, HOV2s may be allowed to "buy in," a situation which would be comparable to that of the SOVs in San Diego. As the main lanes become more congested, time savings incurred by using the HOV facility will increase, and so may the willingness of an individual to pay for the use of the road. Finally, the gradual approach adopted in San Diego to introduce congestion pricing would allow for fine-tuning of the operational and pricing concept as users adapt to the realities and monetary costs of commuting in large, growing metropolitan areas.

2.3 CHAPTER SUMMARY

This chapter has reviewed many case studies of HOV facilities and their variants. First, information was provided about specific HOV facilities around the continent. Those described in detail were found in Washington, D.C.; Houston, Texas; Minneapolis, Minnesota; Orange County, California; Seattle, Washington; Pittsburgh, Pennsylvania; British Columbia, Canada; and Dallas, Texas. The second section focused on new programs that have integrated the HOV concept. These new programs included the sticker program in Boston, Massachusetts, and the QuickRide program in Houston, Texas. The third division expanded on the road pricing concept that was introduced in Chapter 1. Finally, two cases in which pricing has been implemented were discussed (Route 91 and I-15 in California).

CHAPTER 3. GUIDELINES

This chapter provides a summary of the guidelines relevant to high-occupancy vehicle (HOV) lanes. Operational considerations and guidelines are provided in the first section. The second section discusses design issues. The third section describes institutional arrangements. Legal issues are described in the fourth portion. The final part of this chapter presents measures to determine the effectiveness of the HOV facility.

3.1 OPERATIONAL CONSIDERATIONS AND GUIDELINES

The following sections describe the operational considerations and guidelines relevant to an HOV facility. The first part (Section 3.1.1) focuses on facilities located on freeways. Included are the operational alternatives, ingress and egress alternatives, vehicle eligibility and occupancy requirements, transit and support services and facilities, hours of operation, enforcement, and incident management. The second part (Section 3.1.2) focuses on HOV facilities located on arterial roadways. The specific topics discussed are bus stop treatments, vehicle eligibility and occupancy requirements, intersection control, hours of operation, enforcement, incident management, and driveway access and curb use considerations. (The sources of the information, unless otherwise indicated, are the Texas Transportation Institute, Parsons Brinckerhoff Quade and Douglas, Inc., and Pacific Rim Resources, Inc. [1998].)

3.1.1 HOV Facilities on Freeway Rights-of-Way

The operation and enforcement of a freeway or separate right-of-way HOV facility may be influenced by its type (e.g., contraflow, reversible, concurrent-flow), access and egress points, vehicle eligibility and occupancy requirements, transit facilities and services, hours of operation, enforcement strategies, and incident-management plans.

3.1.1.1 HOV Operational Alternatives. Freeway HOV facilities can be classified into two general groups: those in separate rights-of-way and those on freeways shared with mixed traffic. These categories may be further divided by the types of vehicles allowed to use the facility.

One type of HOV facility is a roadway dedicated to buses. The common configuration of this type of facility is one lane in each direction. The advantages of providing buses with separate rights-of-way include high levels of transit service, low incident rates, high reliability, and ease of enforcement. Restricting roadway usage to buses may be appropriate when high volumes of transit vehicles exist or are planned, origins and destinations are densely located, or when collection and distribution systems sufficiently serve origins and destinations. The likely disadvantages of a bus-only facility in a separate right-of-way include high capital costs and insufficient roadway utilization.

High-occupancy vehicles may be the only cars (i.e., nontransit vehicles) allowed on a roadway. Providing a separate right-of-way for HOVs and buses encourages carpooling, increases person movement capacity at little cost, and increases public support for the facility. Some of the disadvantages of permitting other vehicles on facilities that were previously exclusive to buses include some degradation of transit level of service, the possible loss of transit riders (e.g., to carpools), enforcement difficulty, and the potential need to redesign features, such as access points and station locations.

Instead of providing a separate right-of-way, HOV facilities may be incorporated into freeways. They may be exclusive, concurrent-flow, or contraflow HOV lanes. Exclusive HOV facilities may operate under one of two strategies — reversible or two-directional.

Exclusive two-directional HOV facilities are within the freeway right-of-way but physically separated from the general purpose lanes. Concrete barriers or wide painted buffers provide the physical separation. The facility is usually available to buses, vanpools, and carpools through limited access points. The characteristics of a corridor that should consider this type of HOV facility include relatively even directional splits and large volumes of HOVs (at least 400 to 800 vph). The main advantage of two-directional HOV lanes is the range of commuters that benefit from the travel time savings and reliability. Enforcement of an exclusive facility is easier than a nonexclusive one. Disadvantages of an exclusive two-

directional HOV facility include right-of-way requirements, cost of additional right-of-way, and cost of barrier treatment.

Exclusive reversible HOV facilities are similar to exclusive two-directional HOV facilities in that both are built within the freeway right-of-way and physically separated from the general purpose lanes. Reversible HOV facilities are usually available for traffic going toward the central business district in the morning and in the outbound direction in the evening. Daily setup to switch travel direction is required for this type of facility. High directional splits are ideal for reversible HOV lanes. Potential advantages of this facility type include the ability to use available right-of-way in the median of the freeway, cost effectiveness of added capacity during the peak hours, and ease of enforcement. High capital and operating costs and the limited availability of right-of-way are possible disadvantages to exclusive reversible HOV facilities.

Concurrent-flow HOV facilities, unlike exclusive HOV facilities, are not physically separated from the general purpose lanes. A concurrent-flow HOV facility is a freeway lane used exclusively by buses, carpools, and vanpools whose traffic moves in the same direction as that of the adjacent general purpose lanes. The inside shoulder or lane, the one usually reserved for HOVs, may have 0 to 4 ft (0 to 1.2 m) of paint striping to show the separation of the HOV lane from the general purpose lanes. Access may be continuous or limited to specific points. The main advantages of concurrent-flow HOV facilities over other types of HOV facilities are cost and speed. Less right-of-way, if any, needs to be acquired. Disadvantages to concurrent-flow facilities include enforcement difficulty, lower travel time reliability, and merging difficulties.

Like the concurrent-flow HOV facility, the contraflow HOV facility is a freeway lane, usually the innermost one. Unlike the concurrent facility, the contraflow lane is from the off-peak direction and operates in the peak direction. The HOV lane is separated from the opposing traffic by a movable barrier. The contraflow HOV facility is usually open only during peak periods, allowing the lane to revert to its normal use at other times. A successful contraflow lane has a high directional split and does not unduly impact the traffic moving in the opposite direction. The construction costs of this type of facility are low because the lane already exists. Operating costs, however, may be higher than those of other types of HOV facilities. Safety is another concern associated with the contraflow HOV facility.

Metered freeway entrance ramps and toll plazas may provide priority treatment for buses, carpools, and vanpools in the form of HOV bypass lanes. The ramp bypass treatment includes a separate lane alongside the general purpose lane; vehicles do not have to stop at the meter signal and may proceed directly to the freeway (see Figure 1.2).

3.1.1.2 Ingress and Egress Alternatives. Four common methods are employed for providing access to HOV facilities: direct merges, slip ramps, direct access ramps, and direct connections from other HOV lanes.

The direct merge approach allows vehicles to enter an HOV facility from an adjacent general purpose lane. This method is normally used with concurrent-flow HOV lanes. The advantages to the direct merge are the comparatively low capital cost, the ease of use, thus increasing the number of potential users, and the flexibility. Among the disadvantages are conflicts with general purpose traffic when merging and difficulty of enforcement.

Slip ramps are an alternative that may be used with exclusive HOV lanes. These ramps provide a gap in the barrier and permit either the ingress or egress of HOVs (see Figure 3.1). Slip ramps are less expensive than direct access alternatives and have higher user potential. Merging with the adjacent freeway lanes may cause some conflicts. Enforcement with slip ramps is not as easy as with direct access facilities.

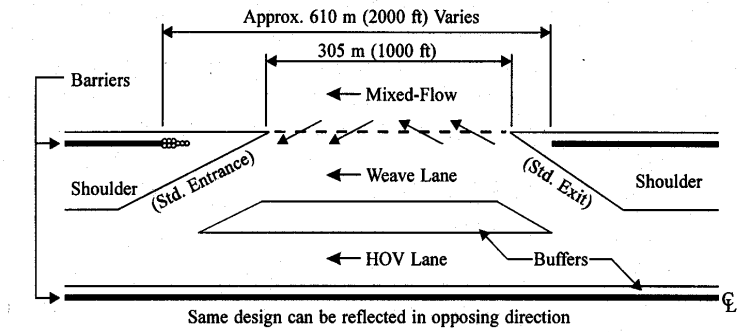

Source: Texas Transportation Institute, Parsons Brinckerhoff Quade and Douglas, Inc., and Pacific Rim Resources, Inc. (1998).

Figure 3.1 Sample Design of a Slip Ramp

Direct access or grade separated ramps allow exclusive access for HOVs. They may take the form of drop, T-, Y-, or flyover ramps (see Figures 3.2a,b,c). Direct access facilities are used to connect the HOV facility with adjacent roads, park-and-ride lots, and transit stations. The advantages of direct access treatment are the lack of disruption of the general purpose traffic, the ability to move high volumes of HOVs, additional travel time savings and reliability, and higher levels of safety. Among the disadvantages are capital costs and the requirement of additional right-of-way.

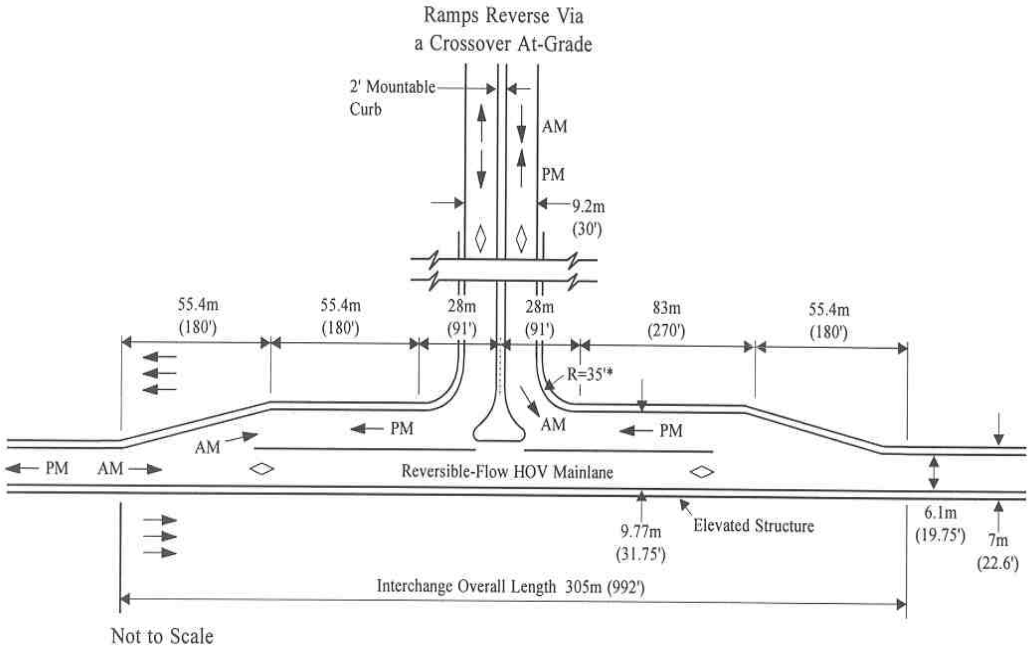

Figure 3.2a Sample Design of a T-ramp

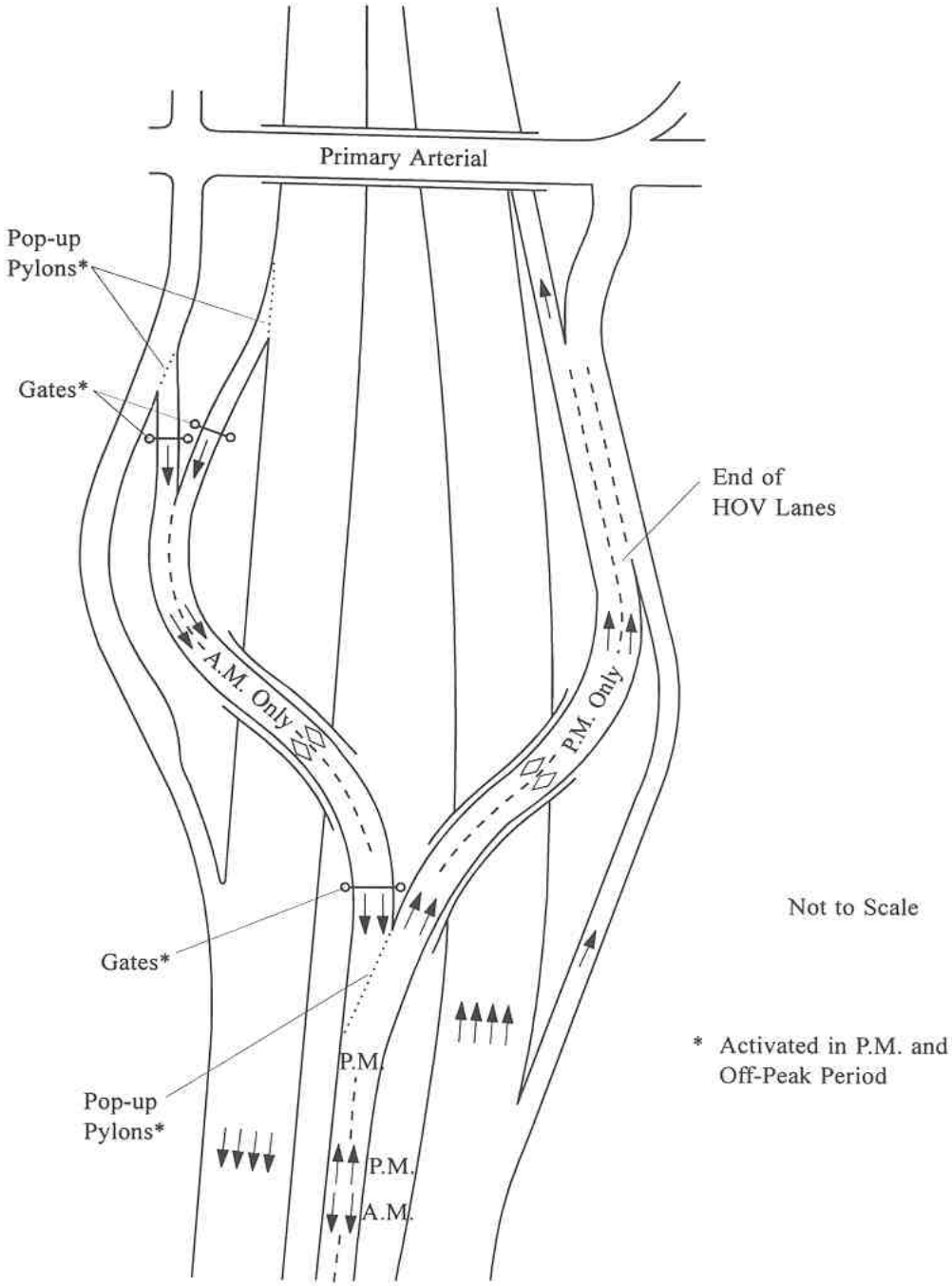

Figure 3.2b Sample Design of a Y-ramp

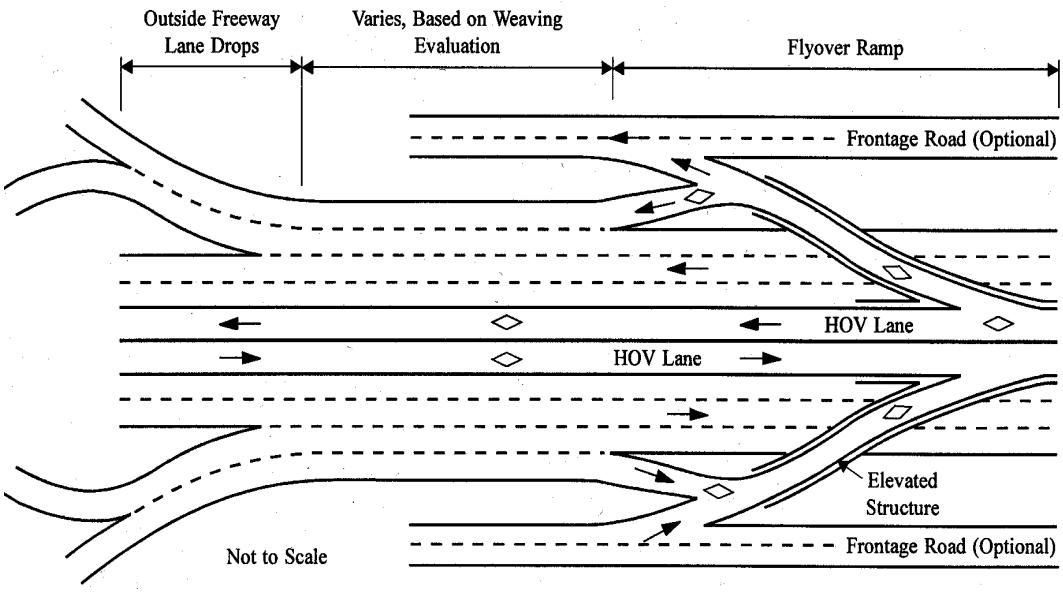

Source: Texas Transportation Institute, Parsons Brinckerhoff Quade and Douglas, Inc., and Pacific Rim Resources, Inc. (1998)

Figure 3.2c Sample Design of a Flyover Ramp

HOV lanes on one freeway may be directly connected to the HOV lanes on another freeway. This connection offers travel time savings that would not be available if the vehicles were required to exit the HOV facility on one freeway, merge with general purpose traffic, use the freeway interchange, and enter the other HOV facility. The lower merging requirements are another benefit to this method. The disadvantages of additional right-of-way requirements and costs are the same as those of direct access ramps.

3.1.1.3 Vehicle Eligibility and Vehicle-Occupancy Requirements. The first step in developing a plan of operations is to determine what types of vehicles will be allowed to use the HOV facility. Among the vehicles that could be permitted on the facility are buses, vans, cars, light trucks, motorcycles, commercial vehicles and trucks, taxis, airport shuttles, and emergency vehicles. There are advantages and disadvantages to allowing each of these types of automotive transportation to use the lanes. Buses offer the highest person-movement capacity but if there are not heavy volumes of buses, the HOV facility is underutilized.

Vanpools have high person-movement capacity but may not contribute significantly to the usage of the facility. Sharing rides in automobiles or light trucks have the advantages of adding HOV facility users at no cost to the public and adding to the person-moving efficiency. A disadvantage to allowing carpools on the facility is high demand that may cause the facility to become congested. Other ways of allowing cars on an HOV lane include sticker programs and tolling. The advantages of these two options are the ability to manage demand and more efficient utilization of capacity. These programs take time and money to implement and make enforcement more difficult. Taxis and airport shuttles also contribute to the utilization of the facility. Allowing commercial vehicles to use the HOV lane reduces the truck traffic in the general purpose lanes but may cause safety concerns in the HOV lane, geometric design issues, and disincentives to use transit or rideshare. Permitting emergency vehicles to use the facility provides travel time savings and reliability to these vehicles, and, therefore, benefits society. Finally, motorcycles add vehicles to the lane but pose safety concerns.

If the decision is made to allow carpools to use the HOV facility, the occupancy requirements will have to be determined. The objective of setting the carpool requirements is to encourage HOV use without causing the facility to become congested. The higher the number of occupants required, the more difficult it is to form carpools that operate on a regular basis. One strategy that may be employed if congestion becomes an issue at a certain time is variable occupancy requirements with higher levels set for the most congested times.

Some general guidelines have been developed to assist in the determination of whether the HOV facility is being sufficiently used but not congested. The type of facility plays the key role in defining the minimum and maximum thresholds. Table 3.1 provides these values according to facility type.

When determining which vehicles to allow on the HOV facility and the occupancy requirements, several factors should be considered. Among these are the metropolitan and project goals and objectives, type of HOV facility, design and operating limitations, segment and area continuity, existing vehicle-occupancy levels, travel time savings and reliability, and HOV use. The vehicle and occupancy requirements should be consistent within a given area so there is no confusion among the HOV lane users. The existing vehicle-occupancy levels provide a good indication of the difficulty of forming carpools of higher numbers of

passengers. The levels should be set to encourage mode shifts that increase HOV use but not degrade travel time savings and reliability.

Table 3.1 Vehicle Volume Thresholds for Freeway HOV Lanes

Type of facility	Minimum Threshold (vphpl)	Maximum Threshold (vphpl)
Separate ROW, bus only	200-400	800-1000
Separate ROW, HOV	800-1000	1500-1800
Freeway, exclusive, 2 directional	400-800	1200-1500
Freeway, exclusive, reversible	400-800	1500-1800
Freeway, concurrent-flow	400-800	1200-1500
Freeway, contraflow, bus only	200-400	600-800
Freeway, contraflow, HOV	400-800	1200-1500
HOV bypass lanes	100-200	300-500

To determine whether vehicle eligibility or occupancy requirements should be changed, vehicle volumes and speeds and travel time savings and reliability should be examined. If the traffic volumes exceed the maximum threshold levels enumerated in Table 3.1 changes should be considered. Speeds on the HOV facility should not consistently fall below a pre-established level. There is a possibility that the travel speeds on the HOV lane could decrease slightly but still offer substantial travel time savings over the general purpose lanes. The minimum level of travel time savings should be established and the lanes monitored to maintain this threshold. Alternate techniques for managing the demand on the HOV lanes include encouraging voluntary higher-occupancy levels or different work schedules, metering access points, and adding HOV capacity.

3.1.1.4 Transit and Support Services and Facilities. Transit service is often closely tied to HOV facilities. There are several transit operating strategies that can be used with HOV lanes. Among these are dedicated services, express and park-and-ride services, neighborhood oriented routes, and reverse commute and suburb-to-suburb routes.

Dedicated transit services do not leave the busway or HOV lane. Access to these routes is gained by foot, a connecting route, or car. Bus operating speeds on dedicated routes

are typically 35–40 mph and may reach 50–55 mph. The most common use of dedicated services is with bus-only facilities.

Express, or park-and-ride, routes begin at park-and-ride lots or another area in the vicinity of the HOV lane and terminate at major activity centers. High-speed service is provided by using the HOV lane. The average speed for the portion of the trip made on the HOV facility is 50–55 mph.

Neighborhood oriented routes provide local service at the beginning of the trip and then use the HOV facility to reach a major activity center. While in residential areas, the operating speeds of the buses are typically 5–10 mph. The speeds on the HOV lane portion of the trip average 45–55 mph. The advantages of neighborhood routes over express routes are passenger convenience and the ability to serve captive riders.

While dedicated, express, and neighborhood routes typically flow in the peak direction, reverse and suburb-to-suburb routes address the needs of other travelers. By using these less traditional routes, city residents are able to work or shop in suburban areas. Additionally, people in one suburb may access other suburbs.

For a transit system to be successful, there needs to be supporting facilities, which can include park-and-ride lots, transit stations, intermodal facilities, and bus stops and shelters. Park-and-ride lots allow users to change from single occupant vehicles to high occupancy vehicles. These lots are aimed at serving commuters who may access the facility via car, bike, or foot. Transit stations may be incorporated into park-and-ride lots, or they may stand alone. While transit stations provide locations for passengers to transfer between bus routes, intermodal facilities allow passengers to transfer from one form of transportation to another. Intermodal facilities are usually large structures. At the other extreme, bus stops and shelters are the smallest location for passengers to await transit.

3.1.1.5 Hours of Operation. The operating hours of an HOV facility can be influenced by the project goals, type of HOV facility, corridor congestion levels, the operating hours of other HOV facilities in the area, and enforcement. The combination of these factors has led to the development of three primary scenarios for the hours of operation. These strategies are 24-hour, extended hours, and peak only.

Some facilities, such as I-84 in Hartford, Connecticut, and the San Bernardino Busway in California, are restricted twenty-four hours a day. The reasoning behind this operation strategy is that HOVs should be provided with travel time savings and reliability at all times. There is little confusion about when a vehicle may use the HOV facility when using the 24-hours-a-day strategy. Enforcement and signing are also easier with this operating plan. The major drawback is the potential public perception that the lanes are not sufficiently utilized.

Instead of excluding solo drivers all day, an operating strategy may be employed where the HOV facility is only restricted for large portions of the morning and afternoon. The usual hours of operation under the extended hours strategy are 6:00 a.m.–11:00 a.m. and 3:00 p.m.–7:00 p.m., which correspond to periods of high congestion. This strategy is especially appropriate for contraflow and exclusive reversible facilities because of the preparation required for the facility. Potential disadvantages of extended operating hours include motorist confusion, enforcement difficulty, and signing and pavement marking requirements.

The least number of hours that an HOV facility can operate is found under the peak period only strategy. The peak period usually falls between 6:00 a.m. and 9:00 a.m. and between 4:00 p.m. and 6:00 p.m. The types of HOV facilities that normally operate under this plan are contraflow and concurrent-flow. Advantages to this strategy include travel time savings and reliability for HOVs during congested periods and potentially solving specific bottleneck problems.

Related to the hours of operation is the use of the facility in the non-operating periods. The HOV facilities with extended hours or peak period only hours provide an opportunity for other vehicles to use the lanes at other times. Concurrent-flow HOV lanes may be converted back to general purpose lanes or shoulders. Contraflow HOV lanes revert back to the mixed traffic lanes during the off periods.

3.1.1.6 Enforcement. The enforcement plan should include six general elements: legal authority, citations and fines, general enforcement strategies, specific enforcement strategies, funding, and communication techniques. Legal authority to enforce the HOV operating strategy may not reside with the appropriate agency until new legislation is created.

The ability to issue citations for violating the vehicle-occupancy requirements, speed limits, and other regulations should be included in the legal authority granted to the enforcing agency. The citations issued may be for "moving vehicle violations," "failure to obey posted signs," or "trespassing." The fines associated with the citations may include a flat fee, court costs, and/or points on a driver's license. Fines may be increased for repeat offenders. Current fines in the U.S. range from $40 to $500, not counting court costs.

To apprehend violators, enforcement can follow one of four general strategies: routine, special, selective, and self-enforcement. Using the routine enforcement plan, police patrols remain at the level prior to the implementation of the HOV facility. Monitoring the HOV lane becomes one additional responsibility for the regular patrols. This approach is appropriate when resources are limited, the facility is easy to monitor, and the violation rate is known to be low. A more aggressive approach to enforcing the HOV facility regulations is the assignment of personnel specific to the HOV lane. This special enforcement may include a patrol car dedicated to the HOV facility, extra patrols in the corridor, or placing personnel on the HOV lane during operating hours. Both special and selective enforcement are especially applicable when a new HOV facility is opened or operating changes have been made. Selective enforcement may also be used when violation rates are high or a specific area has been determined to be problematic. Self-enforcement is used in conjunction with one of the other three strategies. In this approach, motorists may report suspected violators by calling a telephone number posted on signs along the facility and providing the license plate number, time of day, and location of the suspected violator. Information and warnings may be sent to the potential violator's home and repeated offenses may alert enforcement personnel.

Once the general enforcement strategy has been determined, specific enforcement techniques can be chosen. Among the options are stationary, roving, team, and multipurpose patrols, electronic monitoring, and citations or warnings by mail. Enforcement personnel in patrol cars or on motorcycles may be assigned to specific locations along the HOV facility. Roving patrols, on the other hand, involve enforcement vehicles moving along the facility. Team patrols combine stationary and roving techniques. A stationary enforcement agent may observe a potential violator and obtain license plate information, which is radioed to another patrol that actually apprehends the violator. Multipurpose patrols have responsibilities other

than enforcing HOV lane regulations. Some of these additional duties are incident detection and response and general policing. Electronic monitoring may assist any of the patrols in detecting violators. Examples of electronic monitoring include closed circuit television cameras, infrared cameras, and photographs. These techniques cannot be used without some type of patrol because current technology has had problems with inadequate lighting and tinted windows. Patrols may not have to stop violators on the actual HOV lane if the authority exists to issue citations by mail.

Stationary patrols are commonly used with all types of freeway HOV facilities and represent the primary enforcement strategy for separate right-of-way facilities. Roving patrols are most applicable to concurrent-flow HOV lanes. The team approach may be used with exclusive and concurrent-flow HOV facilities. Multipurpose patrols and self enforcement are commonly found on exclusive, concurrent, and contraflow HOV lanes.

Funding for the enforcement program may be obtained from federal, state, or local levels. Federal funds are primarily given for the physical elements, such as planning, designing, and constructing enforcement areas. The federal program may require matching state or local funds. Ongoing enforcement funding may be more difficult to obtain and the responsibility falls on the enforcement agency. Usually state and local funds are used after the initial phase of the HOV project.

3.1.1.7 Incident Management. The organizations that are involved in incident management planning include the state department of transportation, transit agency, state and local police, emergency medical services (EMS), fire departments, tow truck operators, local municipalities, and the FHWA and FTA. Most of the planning is performed by the DOT, transit agency, federal agencies, and local municipalities, but police, EMS, fire, and tow truck operators are the groups that use the plans and should have some input.

There are four main elements to the incident management plan: detection, response, clearance, and communication. Detection encompasses determining the location, nature, and scope of the incident. Low technology techniques for detection include sightings by police, bus operators, motorist assistance patrols, or other personnel, cellular phone calls, commercial traffic reports, and roadside call box reports. Mid level technology techniques include the use of loop detectors and closed-circuit television cameras. Automated vehicle

identification (AVI), automatic vehicle location (AVL), advanced transportation management systems (ATMS), and integrated transportation management systems (ITMS) represent high technology techniques that may be employed for incident detection. Once the problem has been located and its scope and nature determined, the proper personnel are dispatched to the scene. In nearly every case, police are dispatched to manage traffic, but a tow truck may be the only other responder to a disabled vehicle. At the other extreme is an accident involving a hazardous material, which would require police, fire, EMS, a special response team, and a towing service. These agencies work together in clearing the incident. Before operations return to normal, communication with other motorists may help reduce delays and provide a safer environment. Commercial radio and television stations, highway advisory radio, changeable message signs, and advanced traveler information systems are four methods available to provide information to motorists.

HOV lanes may play a role in the incident management plan for the freeway. The facility may be opened to mixed traffic under severe weather conditions or when there is a major incident on the freeway. Additional signing may be needed in such situations to let drivers know that they are allowed on the HOV lanes.

3.1.2 HOV Facilities on Arterial Streets

This section of the chapter discusses operational aspects of arterial HOV facilities. The first portion outlines general information. The specific topics discussed are bus stop treatments, vehicle eligibility and vehicle–occupancy requirements, intersection control, hours of operation, enforcement, incident management, and driveway access and curb use considerations.

3.1.2.1 General. Elements that should be considered for the operation of an arterial HOV facility include operational alternatives, vehicle eligibility and occupancy requirements, hours of operation, enforcement, incident management, intersection control, driveway access, and curb use considerations.

Arterial facilities differ from freeway HOV facilities in several ways. The arterial streets provide access to local streets, but the freeways have limited access points. As a result of the increased number of access points, signalized intersections, and driveway access, the speed limits of the arterial roadways are lower than those of freeways (35–50 mph

versus 55–70 mph). The goals of the HOV facility on arterial roadways are the same as those of the freeway HOV facilities and include providing travel time savings and reliability to high-occupancy vehicles.

These HOV facilities are typically implemented on existing roadways. They can be converted curb lanes or travel lanes. Some of the curb lanes are only used for HOVs during a portion of the day; during the remainder of the day, the curb lanes can be used for parking.

Bus malls are for the exclusive use of public transit vehicles. Some of these malls provide waiting areas and information kiosks. Several benefits exist for transit operators. The bus malls offer free flow conditions for transit vehicles through congested activity centers. Coordinating the traffic signals or signal priority for buses are other potential benefits. Finally, bus malls offer a focal point for transit, which allows for the consolidation of routes; this, in turn, leads to enhanced bus operations and ease of passenger use.

For transit malls to be successful, several criteria must be met. The area considered for implementation must be a major activity center and have high bus volumes and congestion on the local streets. However, the streets must have capacity remaining on them so that the other traffic is not negatively impacted by the implementation of the HOV facility. Creating a bus mall may be costly; variables include the length of the facility, design changes to the roadway and sidewalk, waiting areas, overhead building connections, and landscaping.

The rightmost lanes may be used for HOVs or buses only. This is the most common type of HOV lane on an arterial roadway. Bus only lanes are often used in downtown areas. The hours of operation may be peak hours or 7:00 a.m.–7:00 p.m. or 8:00 a.m.–6:00 p.m. Among the advantages of a right side HOV lane is the fact that bus boarding takes place on the right. Intersection turning movements may be less disrupted if the HOV lane is located on the rightmost lane. There may be negative impacts on street-side parking, deliveries, enforcement, access/egress to driveways, and the interaction of carpools and vanpools and bus stopping.

Curb lane bus-only facilities typically operate during the morning and afternoon peak periods or all day. During the off-peak periods, these lanes are available to general purpose traffic, parking, or delivery vehicles. For the success of this type of facility, congested roadways and high volumes of buses are needed. The primary benefit of implementing a bus-only lane is improving transit operations. Potential problems that might be encountered

include the need to use the lane for right turns, illegally parked cars, and the loss of on-street parking.

Bus-only facilities may also be found in the second travel lane. This placement of the HOV lane allows for the curb lane to be open for bus boarding and deboarding, turning movements of all vehicles, deliveries, and parking. For the success of this type of facility, high volumes of buses are required. Locating the bus-only lane in the second travel lane may be appropriate to link other HOV facilities through a downtown area. The bus-only lane in the second travel lane may be combined with a curb lane bus-only facility if additional capacity is needed for buses, allowing buses to pass other buses stopped for boarding activities.

Curb lane HOV facilities differ from curb lane bus-only facilities simply in the types of vehicles permitted to use the lane. The HOV facility permits carpools and vanpools in addition to buses. High volumes of carpools and vanpools are required for the success of the HOV facility. The curb lane HOV facility may be a logical method to connect freeway HOV facilities to major activity centers. Potential negative impacts of the curb lane HOV facilities are the same as for curb lane bus-only facilities. Another possible problem may arise when carpools and vanpools need to merge into the general purpose lanes to make a left turn.

An HOV lane may be located in the left-most lane. The advantage of locating the HOV facility in the left lane is the elimination of conflicts with on-street parking, deliveries, and right turn movements. This approach to HOV facilities offers the greatest advantage when the length of the facility is substantial. Problems may arise with the left turning movements of the general purpose traffic and passenger boarding of buses.

The final possible location for an HOV facility on an arterial roadway is the center of the street, between the opposing lanes of traffic. Vehicles that are permitted are buses with or without the addition of carpools and vanpools. The facility may include lanes operating in both directions or a single reversible lane. Some separation of the HOV lanes from the general purpose lanes should be implemented and may be a physical barrier or paint striping. The advantages of locating the facility in the center include the elimination of interference with parking, deliveries, and right turn movements. Potential difficulties may be experienced with the left turn movements of the general purpose traffic and providing bus stops in the middle of a roadway. If the HOV facility is reversible, additional operating costs and

personnel are required to open and close the facility. Generally, more entrances and exits are needed than if the HOV lane only operated in one direction.

If the arterial street is one-way, a contraflow HOV lane may be implemented. This type of facility is used to move buses and HOVs through congested areas. In addition to the benefits of increased travel speeds and reliability, bus routes can be consolidated onto the contraflow lane, which offers simpler operations and a focal point for transit riders. Potential negative impacts revolve around the turning desires of the general purpose traffic.

A special treatment that may be offered to HOVs is a signal queue jump lane. This type of lane allows HOVs to bypass the wait generated at a traffic signal. One technique employed is to provide a separate signal for the jump lane that would have advanced green, allowing the HOVs to pass through the intersection and merge with the general purpose traffic lanes ahead of the other vehicles.

Another aid to buses and HOVs is signal priority. In this situation, technology is used to alter the timing of a traffic signal. If the HOV is approaching the signal and the light is currently green, the green phase is extended; otherwise, the red phase is shortened. Caution must be exercised with this technique so that the impact on the cross-street traffic is minimal and there is no conflict with emergency vehicle priority systems.

Signal priority can be provided using a variety of techniques, such as lengthening the green phase, shortening the red phase, or implementing a special phase. Extending the green phase may be considered when a bus is nearing an intersection at the end of the normal green phase and there is not a stop on the near side of the intersection. Truncating the red phase allows the bus to continue through the intersection without stopping for a red light. This treatment should not be used with near-sided bus stops. Adding a special phase means a short green phase is interjected into the normal signal cycle. Using a special phase may be appropriate when near-sided bus stops are employed for queue jump lanes. In order for signal priority techniques to be implemented, there must be a way to identify the transit vehicles. Some of the vehicle identification techniques are optical or microwave automatic vehicle identification and inductive loops.

3.1.2.2 Bus Stop Treatments. There are three possible locations for bus stops: near side, far side, and mid-block. The first bus stop location is the near side of an intersection.

After stopping for passenger boarding and deboarding, the bus passes through the intersection and either merges with the general purpose traffic or continues in a separate HOV lane. The benefits of locating the stop on the near side of the intersection include ease of pulling to the curb, use of red light time, ease of making connections with buses on cross streets, and reduced potential for buses to block the intersection. Potential disadvantages to near-side stops include delays due to the traffic signal, limitations to signal priority strategies, decreases in pedestrian sight distance, buses blocking road signs, and interference with general purpose traffic right turns.

The far side of an intersection is another possible location for bus stops. The advantages of far-side stops include reduction in the potential need for buses to stop at an intersection twice (once for passengers and once for a red light), allowance for signal priority treatments, passenger convenience for connecting bus routes, reduction of right-turn movement conflicts with general traffic, and reduction of the potential for buses to block street signs. Among the disadvantages of far-side stops are increased difficulty in merging with general traffic, increased potential for rear end accidents, reduced convenience for connections, potential for the buses to block an intersection, conflicts with cross street vehicles making right turns, and reduction of sight distance for general traffic.

Bus stops may also be located in the middle of the block. Positive aspects of this location include providing a link to major centers, ensuring sufficient space for the bus, reducing interference with intersection operations, and encouraging signal priority strategies. Disadvantages of mid-block location include difficulty in merging back into traffic, reduction in convenience for passengers making connections, mid-block congestion due to the merging of buses into the traffic stream, and the removal of on-street parking.

3.1.2.3 Vehicle Eligibility and Vehicle — Occupancy Requirements. Vehicle eligibility and vehicle-occupancy requirement issues for arterial HOV lanes are similar to those for freeway HOV facilities (see section 3.1.1.3). Two additional types of vehicles must be considered for the arterial HOV lanes: bicycles and delivery vehicles. Like freeway HOV facilities, lane utilization should fall within thresholds that vary by type of facility (see table 3.2). The arterial facility thresholds are significantly lower than those of freeway HOV lanes.

Table 3.2 Vehicle Volume Thresholds for Arterial HOV Facilities

Type of HOV Facility	Minimum Utilization (vphpl)	Maximum Utilization (vphpl)
Bus Mall	80-100	200-400
Bus Only	50-80	100-200
HOV (left or right side)	200-400	600-800
Center Two-Way	200-400	600-800
Center Reversible	80-160	400-600

3.1.2.4 Hours of Operation. The same three main strategies employed for the operating hours of a freeway HOV facility can be applied to an arterial HOV facility: 24-hour, peak-period, and peak-hour operation (see section 3.1.1.5). The 24-hour strategy tends to be employed with transit malls, downtown bus lanes, and some HOV lanes open to buses and vanpools and carpools. Restricting a lane to HOVs during the peak period is common for arterial facilities. This strategy addresses bottleneck problems during the peak period and allows on-street parking and deliveries during the off peak periods.

3.1.2.5 Enforcement. Enforcement of arterial HOV facilities may be more challenging than that of freeway facilities. Difficulties may be attributed to the shorter length of the facilities and the need for general purpose traffic to weave in and out of the HOV facility to make right or left turns. Operational difficulties are often compounded by staffing shortages because enforcement on arterial roadways is usually handled by the local police, who must tend to numerous competing demands.

As with freeway HOV enforcement, the program should consist of six elements: legal authority, citations and fines, general enforcement strategies, enforcement techniques, funding, and communication techniques. One major difference from freeway HOV facilities is that the majority of the citations issued for arterial HOV facilities are for parking or moving violations. (See Section 3.1.1.6 for enforcement strategies and techniques.)

3.1.2.6 Incident Management. Incident management for arterial HOV facilities can be handled in a similar fashion to freeway HOV facilities (see Section 3.1.1.7 for details).

3.1.2.7 Intersection Control, Driveway Access, and Curb Use Considerations. Arterial street HOV facilities may experience problems with turning movements, regardless of the lane that is designated as HOV. One method to ensure safety is to restrict the turning movements for all or a portion of the day. Every intersection cannot have restricted turns, so periodic turning locations should be provided. A second method for accommodating general purpose traffic turning movements is to allow these vehicles into the HOV lane to make the left or right turn. A cautionary note to this approach is that the level of service of the HOV lane may be degraded if there are heavy volumes of turning vehicles. The third suggested method is to construct a separate turning lane on the outside of the HOV lane and permit general purpose traffic to cross the HOV lane to access the turning lane. This approach has potential safety problems with slowing or stopped buses conflicting with general purpose traffic. A fourth approach is to allow turns from the general purpose lane to cross the HOV lane; this method may degrade the level of service of the HOV facility and pose safety concerns.

If the HOV lane is located in the curb-side lane, on-street parking must often be eliminated during the facility's hours of operation. Business managers may be concerned about the impact of having less parking for their customers. If the HOV facility only operates during a portion of the day, the lane may be used during other times for parking and deliveries. However, enforcement is required to ensure that no one violates the hours. The other option is to provide alternate parking across the street or in other locations.

Another issue that may have an impact on businesses is the interference of the HOV lane with driveway access. Most of the problems arise when the HOV facility is located in the right lane. Driveway consolidation is an option that may reduce the conflicts between the general purpose and HOV traffic. The use of side streets for parking lot egress could also be beneficial.

3.2 DESIGN GUIDELINES

This section provides current design guidelines for high-occupancy vehicle facilities. The first section focuses on freeway facilities. The second portion is dedicated to arterial roadway HOV lanes. (The source of information, unless otherwise indicated, is the Texas

Transportation Institute, Parsons Brinckerhoff Quade and Douglas, Inc., and Pacific Rim Resources, Inc. [1998].)

3.2.1 HOV Facilities on Freeway Rights-of-Way

In the following paragraphs, the design of HOV facilities on freeways is discussed. Specific topics covered include facilities in separate rights-of-way, exclusive facilities, concurrent-flow facilities, contraflow lanes, beginning and ending freeway HOV lanes, ramp metering considerations, enforcement considerations, signing, and pavement markings.

3.2.1.1 General. According to the *HOV Systems Manual*, there are six steps that a design team should take:

1. Review recommendations that were made in the planning process.
2. Consider operational issues and opportunities.
3. Gather input from public and local organizations.
4. Assess the traits of the freeway or corridor.
5. Develop preliminary designs.
6. Select and finish a preferred design.

When developing a preliminary design, the design vehicle should be determined. There is a vast difference between the performances of buses and cars. Buses have much larger turning radii, and should govern the design of corner radii. The larger vehicles' characteristics are also important for the speed change lanes and downgrade vertical alignment. Cars, because of the height of the driver's seat, require a longer stopping sight distance, which should be considered in alignment design.

The design speed of an HOV facility on a freeway is generally the same as that of the neighboring general purpose lanes.

The geometric alignment of the HOV facility has eight main factors that should be considered: horizontal clearance, vertical clearance, stopping sight distance, superelevation, cross slope, horizontal curvature, vertical curvature, and gradients. The guidelines that should be used fall under AASHTO, ITE, and state regulations.

1. Horizontal clearance. There should be a minimum of 2 ft of clearance from barriers, columns, and other obstructions. The desired distance is 4 ft.
2. Vertical clearance. The tallest vehicle that will be allowed to use the HOV lanes should govern the vertical clearance. Typically, these vehicles will be buses. For HOV facilities on freeways, the same standard that is applied to the general purpose lanes can be used — 16.5 ft. This standard is also used for separate right-of-way facilities.
3. Stopping sight distance. Cars usually require a longer stopping sight distance than a van or bus. The *HOV Systems Manual* suggests that the AASHTO standards be adopted for HOV facilities.
4. Superelevation. AASHTO standards should be used for determining the proper superelevation.
5. Cross slope. For an HOV lane on a freeway, the cross slope is generally the same as the adjacent freeway, usually about 2.0 percent. In the case where the HOV lane is in the median of the freeway and straddling the crown of the roadway, there should be a 2.0 percent slope to both sides.
6. Horizontal curvature. AASHTO and individual state guidelines should be followed.
7. Vertical curvature. The design of an HOV lane on a freeway should have the same vertical curvature as the adjacent freeway. AASHTO and state guidelines should be used when determining K-factors for HOV facilities in separate rights-of-way.
8. Gradients. Guidelines for the gradients of HOV facilities on freeways and separate rights-of-way can be found in the *AASHTO Green Book*. The maximum grade for a design speed of 65 mph is about 5 percent.

When considering an HOV facility in a separate right-of-way, there are three cross-section components to consider: travel lanes, shoulders, and roadside areas. The desirable widths of shoulders and lanes are 12 ft. The shoulders could be reduced to 8 ft and the lanes could be 11 ft.

If a median is used to separate opposing traffic flows, as AASHTO suggests for high-speed facilities, there are two options for the median; it may be a barrier, or it may be flush. Flush medians should be 8 to 10 ft wide and have pavement markings.

3.2.1.2 Separate Right-of-Way. The recommended cross slope of the travel lanes is 1.5 to 2.0 percent with a centerline crown. From an operational standpoint, the use of a 2.5 percent slope is not recommended, regardless of high rainfall. The cross slope of the shoulders should be between 1 percent and 8 percent greater than the adjacent travel lanes.

If the HOV facility is to be used exclusively by buses, the shoulder should be paved. The width of the shoulder is generally 10 to 12 ft. The reason for this width is that a stopped vehicle should be out of the travel lane by 1 to 2 ft. Shoulder widths between 8 and 10 ft may be acceptable in some situations, but shoulders smaller than 8 ft are undesirable except for very short segments of roadway.

The recommended clear zone width is 30 ft on each side of the roadway. This may be problematic in urban areas. If the desired clear zone width cannot be obtained, it can be reduced, provided that the design speed is lowered or the facility is used only by professional drivers who do not exceed the posted speed limit.

If acceptable shoulder width or lateral clearance is available, barriers may be placed on both sides of a busway. This design is particularly useful in the situation where there is restricted right-of-way. The minimum recommended lateral clearance from the barriers is 2 to 4 ft. If the operating speed of the facility is at least 50 mph, there should be 4 ft between the lane and the barrier. For low-speed facilities, a 2 ft offset is acceptable.

3.2.1.3 Exclusive Freeway HOV Facility. There are two primary types of HOV facilities on freeways that operate exclusively for high-occupancy vehicles. They are named "two-directional" and "exclusive reversible." The primary characteristics of each type are described in the following sections.

Two-Directional. There are examples of exclusive two-directional HOV facilities in Los Angeles, California and Hartford, Connecticut. The HOV lanes are the inside lanes of the freeway so the design of these special lanes is similar to that of the freeway. One addition is a buffer between the main lanes and the HOV lanes.

A median barrier is usually used to separate opposing traffic on the HOV lanes. The design of the barrier should follow AASHTO, federal, and state guidelines. In the case where a median barrier cannot be implemented, a shared shoulder in the median can be used. This shoulder should be 10 to 13.5 ft wide.

The desirable travel lane width is 12 ft. Narrower lanes may be used for short portions of the facility if there is a constraint on the right-of-way. To separate the special lanes from the general purpose lanes, painted buffers or buffers with pylons are used.

Exclusive Reversible. Exclusive, reversible HOV lanes are within the freeway right-of-way but physically separated from the general purpose lanes, usually by concrete barriers. In the morning, the facility operates toward the central business district or other major activity center. In the evening, the lanes are open in the opposite direction. Because of the changing direction, some daily setup is required for this type of facility. The activities may include opening gates to the HOV lanes, closing the lanes, reopening the lanes in the opposite direction, and closing the facility at night. Automated techniques are available to accomplish the opening and closing of the facility.

The recommended lane width is 12 ft. The majority of the two lane reversible HOV facilities have a shoulder width of 10 ft on one side. On the other side, there may be a shoulder or lateral clearance ranging from 2 to 10 ft in width. AASHTO standards require at least one 10 ft shoulder. For safety reasons, shoulders between 4 ft and 8 ft wide should not be used. A one-lane facility may have a design envelope of 28 ft or a reduced envelope of 20 to 22 ft. The design envelope for the two-lane facility should be 44 ft but may be reduced to 36 ft.

3.2.1.4 Freeway Concurrent-flow. Concurrent-flow HOV facilities are most often located on the inside lane or shoulder of the freeway. To separate the HOV lane from general purpose lanes, paint striping is often used. Access to the HOV lane may be continuous or limited to specific points.

A common method of implementing a concurrent-flow HOV lane is to retrofit an existing freeway. The HOV lane may be placed on the inside shoulder or the center median. The freeway right-of-way may be extended and an HOV lane added. The desirable width of the HOV lane is 12 ft.

If the HOV facility is located on the inside lane of the freeway, a breakdown shoulder should be available. The recommended width of a shoulder next to a median barrier is 10 to 14 ft. Some of the concurrent-flow HOV facilities are separated from the general purpose lanes by more than additional paint striping. In some cases, separation is provided by a narrow buffer, usually 2 to 4 ft wide. Two disadvantages of using the buffer are (1) the potential for drivers to use the HOV facility as a breakdown lane and (2) the weaving that may occur if access is limited.

3.2.1.5 Contraflow. The contraflow HOV facility takes a lane from the off-peak direction and converts it to the peak direction. There are several characteristics that must exist on the freeway before a contraflow HOV facility can be considered. First, there must be a vast difference in the number of vehicles traveling in opposite directions. Second, excess capacity in the off-peak direction must be available. Finally, the HOV facility must be able to be designed and operated safely.

Two additional considerations are needed for the contraflow facility design compared to the design of other HOV facilities. Special access and egress to the HOV lane will be required. For safety purposes, the HOV lane must be separated from the opposing traffic on general purpose lanes. Plastic pylons are used to separate the traffic on Route 495 and the Long Island Expressway, located in the New York City/New Jersey area. On the East R.L. Thornton Freeway in Dallas and the Southeast Expressway in Boston, movable barriers separate opposing traffic flows.

The median and inside shoulder are located to the right of the contraflow HOV lane because of the use of an existing freeway lane. Ten feet is the desired width of the shoulder. In the event that this amount of space is not available, areas for disabled vehicles should be provided periodically. The desired width of the HOV lane is 12 ft. Two feet of lateral clearance from the pylons or moveable barriers for both the HOV lane and the general purpose lane is desirable, but is not found in existing contraflow HOV facilities.

3.2.1.6 Beginning and Ending a Freeway HOV Lane. The majority of HOV lanes located on freeways are in the left lane or center median. This presents a difficulty for access and egress to the facility. Two common methods for ending the left-sided HOV lane are 1)

to merge the HOV lane traffic into the left general purpose lane and 2) to extend the HOV lane but have no occupancy restrictions on the extension. Entry to the HOV facility is usually granted from the left side of the lane or by direct access. Access to a concurrent-flow HOV lane is often granted via a merge from an adjacent freeway lane. In the case where barriers are used to separate the HOV lane from general purpose lanes, gaps in the barriers are needed to allow HOV traffic to enter and exit the facility. Signs for entry points should be located one mile in advance.

The access to concurrent-flow HOV lanes is usually direct merge or at-grade. Two different approaches are currently in use. The first is unrestricted or unlimited access and is used almost exclusively with HOV lanes that operate only during peak periods. For this approach, no additional lane is provided for weaving or acceleration; vehicles are permitted to merge in and out of the HOV lane at will. The unrestricted access approach allows the HOV lane to be easily converted back to a general purpose lane. The second approach is restricted or limited access. In this case, the locations where vehicles can enter and exit the HOV facility are regulated; most of these locations are able to accommodate both movements. Typically, vehicles merge directly into the HOV lane from the general purpose lane and vice versa. The important design features of direct merge or at-grade access approaches are signing, pavement markings, and special paint striping.

There are both advantages and disadvantages to the use of direct merge or at-grade access. Among the positive points are relatively low cost and high flexibility. The negative aspects focus on the weaving movements of vehicles. Enforcement can be extremely difficult because there is no control over the vehicles entering and leaving the facility. Safety can be an issue because of the differences in speeds of the vehicles on the HOV lane and the freeway lanes. HOV drivers wishing to exit the freeway may have several lanes of traffic to cross to reach the exit. The restricted access approach may also have problems with weaving because of the concentration of these movements.

Slip ramps are another relatively inexpensive way to provide access to the HOV facility. They can be implemented at the beginning, end, or middle of the facility. The types of HOV facilities for which the slip ramp approach may be applicable include barrier-separated, buffer-separated, and contraflow facilities. Slip ramps cannot accommodate

ingress and egress at the same time. A merge area downstream of the slip ramp is recommended.

Direct access ramps are applicable in cases where high volumes are expected or greater time savings and operational efficiencies can be achieved. These ramps may be used with any type of HOV lane but are most often associated with exclusive HOV facilities. Advantages to the use of direct access ramps include the ability to move high volumes of HOVs without interfering with the operation of general purpose lanes, travel time savings and reliability, ease of enforcement, and higher safety levels. Cost is the primary disadvantage to using direct access ramps since additional right-of-way may have to be purchased and capital costs can also be high.

Drop or T-ramps are one example of direct access ramps. Drop ramps have the elevated part of the ramp on the HOV lane and lower onto the freeway, local road, or park-and-ride lot. The most common application of drop ramps is to exclusive, barrier-separated HOV facilities. For safe operation of the facility, acceleration and deceleration lanes should be provided along the HOV lane. Shoulders are recommended for each direction. If the ramp is two directional, a barrier should be placed between opposing traffic lanes. Taking into account the shoulders, central barrier, and lane, the desired cross sectional width for a single direction drop or T-ramp is 22 to 24 ft. For a two directional ramp, the recommended cross section width is 46 ft, although a reduction to 38 ft may be used for low-speed access.

Flyover and Y-ramps also provide direct access to HOV facilities. These types of ramps are intended for high speeds and high volumes. Flyover ramps, since they require elevated structures, can be expensive to construct. The recommended width for a flyover ramp is 22 to 28 ft for each direction. The cross-section should not be smaller than 20 to 22 ft.

HOV facilities on multiple freeways may be directly connected. The major benefits that can be realized are travel time savings and improved operating efficiencies. The most significant hindrance is cost. Before the decision is made to build the direct HOV facility connection, an analysis of the demand, safety, and cost should be made. In order for the demand to be considered high, 800 to 1,000 vehicles should use the facility per hour. Once the decision has been made to build a freeway-HOV-to-freeway-HOV connection, the design should follow that of a general purpose freeway-to-freeway ramp.

3.2.1.7 Design Considerations for Ramp Metering. Ramp metering is used to create a more uniform flow of traffic on a freeway. A method to encourage riders to use carpools, vanpools, and buses, these HOVs may be allowed to bypass the queues that form at entrances to freeways. These HOV bypass ramps may be the only form of HOV lane on the freeway, or they may be used in addition to an HOV lane on the freeway. The bypass ramp may take one of two forms. The first is an additional lane to the existing ramp. As a second option, the HOV bypass ramp may be a separate entity from the general purpose ramp.

In the first case, where the HOV bypass lane is on the same ramp as general purpose lanes, standard lane width of 12 ft is recommended by AASHTO. Often the ideal conditions do not exist and the lane width may be dropped to 10 to 11 ft. The inclusion of shoulders is desirable but may not be possible in some cases. In order for the HOV traffic to merge with metered general purpose traffic, the freeway should be located 300 ft from the meter. The HOV bypass lane may be located to either the right or left of other ramp lanes. An advantage to placing the bypass lane on the left is a lower tendency for the lane to be blocked at the entrance. A disadvantage to the left side location is the requirement for buses to merge right after passing the meter, a difficult maneuver because of the low visibility for bus drivers during right merges. In addition to avoiding the problem of right merges, locating the HOV bypass lane on the right side has an advantage for enforcement if an enforcement area is provided.

Providing a separate entrance ramp for HOVs is the second option. National and state guidelines should be followed for the design of these ramps. The suggested location of the HOV ramp is downstream of the metered ramp.

3.2.1.8 Design Considerations for HOV Enforcement. Each type of HOV facility requires a different enforcement strategy. Exclusive barrier-separated facilities usually have enforcement areas at the entrances and exits. Concurrent-flow HOV facilities are the most difficult to enforce. Recommended provisions for enforcement on this type of facility are continuous enforcement shoulders with some barrier offsets and continuous right side shoulders. A minimum of periodic mainline enforcement areas, monitoring areas, and continuous right shoulders should be provided for the enforcement of concurrent-flow HOV

facilities. Contraflow HOV lanes are easier to enforce than concurrent-flow lanes. Recommended treatment for the contraflow facility is to provide an enforcement area at the entrance to the lane and a continuous enforcement shoulder. A minimum provision that is acceptable is an enforcement area at the entrance. For HOV queue bypass lanes, a continuous right side shoulder with enforcement areas and a "duplicate head facing enforcement area" is recommended. A minimum enforcement provision for a bypass lane should be a monitoring section with a continuous downstream right shoulder.

Since the most common infraction committed on an HOV lane is occupancy violation, police officers must be able to see into the vehicles using the facility. Space adjacent to the HOV lane must have good lighting and visibility for proper enforcement. These needs can often be accommodated by providing continuous, full-width shoulders.

Enforcement areas are split into two groups — high-speed and low-speed enforcement areas. Low-speed areas are located primarily at the entrances to HOV facilities. The design of these areas provides space for monitoring, apprehending, and citing violators. When practical, violators should be removed from the facility at these low-speed enforcement areas. The recommended features for low-speed enforcement areas include a length of at least 100 ft, not including entrance and exit tapers, a width of 14 to 15 ft, an approach taper of 2:1, and a departure taper of 10:1.

High-speed enforcement areas are typically provided when the HOV facility has at-grade access locations with speeds of at least 45 mph or the shoulders are too narrow for enforcement. The features of high-speed enforcement areas should include a length of 100 ft, not including tapers, a width of 14 to 15 ft, an approach taper of 20:1, a departure taper of 80:1, and enforcement area intervals of 2 to 3 miles.

3.2.1.9 Regulations and Guidelines for Signing and Pavement Markings for HOV Facilities. Sign design and location, along with pavement markings should follow the *Manual of Uniform Traffic Control Devices* (MUTCD). Specific sections of the MUTCD that should be considered for HOV lanes are Section 2B-20 (*Preferential Lane Signing*) and Section 3B-22 (*Preferential Lane Markings*).

Based on the MUTCD, AASHTO, and state and federal guidelines, the *HOV Systems Manual* recommends four general elements for signage used on HOV facilities. The first is

black letters on a white background. A diamond symbol should be placed on all HOV lane-specific signs. The second suggestion is that the size and location of signs be related to the design speed of the facility. HOV lane restrictions should be posted at regular intervals along the facility. Finally, signs should be placed at the access points and in advance to the start of the HOV lane.

One of the most common pavement markings for an HOV facility is a white diamond. The MUTCD recommends the use of diamond markings for HOV lanes. AASHTO specifies that the diamond be 13 ft long, and 3.2 ft wide. The MUTCD and AASHTO recommend that spacing between the diamonds be 500 to 1,000 ft.

Solid paint stripes are used in HOV facilities to indicate no passing zones, as is the standard for other roadways. Solid white striping is used to indicate the right shoulder. Solid white or yellow stripes are employed in the center of two-way HOV facilities to separate opposing traffic. Concurrent-flow HOV facilities may use skip striping to separate the HOV lane from general purpose lanes. Double skip stripes indicate continuous access, and solid double lines indicate areas where access is not permitted.

3.2.2 Design of HOV Facilities on Arterial Streets

Arterial roads have a variety of functions that must be considered when designing an HOV facility. These roadways may be used to connect neighborhood streets to freeways, provide access to businesses, and provide space for deliveries and parking. There is usually little flexibility in the design of the HOV facility on an arterial road because the area is typically heavily developed and the street network already constructed. Consideration must be given to slower operating speeds, pedestrians, bicycles, bus stops, and turning movements for non-HOV traffic.

3.2.2.1 General Considerations. The characteristics of vehicles that will primarily use the HOV facility play an important role in the design. The majority of arterial HOV facilities are used by buses. The turning radii for these vehicles can be obtained from AASHTO and can aid in determining lane and shoulder widths and lateral and vertical clearances. The acceleration and deceleration rates for these vehicles are typically low, 2.0 mph/second and 2.5 mph/second, respectively.

3.2.2.2 Bus Malls. Transit mall design is specific to the location. Lanes are typically 12 ft in each direction. Features that may be included in the transit mall design are bus pull-ins, bus bulbs, medians, sidewalks, connections to skywalks, and amenities.

General purpose traffic must be directed onto other streets before the start of the mall. Signs may direct this traffic to turn left or right at the intersection before the mall. Buses may enter the mall directly from that point.

3.2.2.3 Right Side HOV Lanes. The term right side can mean the curb lane or the second lane from the curb. These lanes can be bus-only or general HOV. Usually these lanes have already been constructed and can be converted to HOV lanes with few modifications in design. The HOV facility usually begins and ends at an intersection.

3.2.2.4 Left Side HOV Lanes. Left side HOV lanes are relatively scarce in practice but may be appropriate when there are high volumes of HOVs or these vehicles need access to an HOV-only left turn lane. The HOV lane is typically 12 ft wide. The origin and termination points of the facility are usually intersections.

3.2.2.5 Center HOV Lanes. When the HOV facility is located in the center of the roadway, there are several design possibilities. There may be a single reversible lane or lanes for travel in both directions. The HOV facility may be separated from the general purpose lanes by barriers or paint striping. Access and egress is usually granted at intersections. The width of the lanes should be 12 ft and barriers may add another 2 to 4 ft.

Bus stops associated with the facility may be located in the center of the roadway. If the facility is not bus-only, bus pull-ins will be required. This additional right-of-way will increase the capital cost of the project.

3.2.2.6 Contraflow on One-Way Streets. Contraflow HOV facilities may be implemented on one-way arterial streets. Typically these facilities are restricted to buses, which enter and exit the facility via cross-streets. The bus lane may be separated from

opposing traffic by a curb or paint striping. Modifications to traffic signal heads may be required.

3.2.2.7 Bicycle Considerations. Bicycles may be allowed in the arterial HOV lane or may have a separate lane on the same roadway. If bicycles are using the HOV facility, the lane should be widened. Bicycle lanes, as separate entities, should be 4 to 5 ft wide.

Greater care must be given to pavement conditions if bicycles are permitted on the roadway. The portion of the street used by cyclists should be smooth and not have potholes. Drainage grates and manhole covers should be clearly marked.

3.2.2.8 Signing and Pavement Markings. The *Manual of Urban Traffic Control Devices* (MUTCD) should be consulted for the design of signs and pavement markings used on arterial HOV facilities. Typically, signs are placed overhead and on the side of the road to denote an HOV lane. Information placed on signs may include vehicle eligibility, operating hours, and penalties for violations. The diamond symbol is a common pavement marking for HOV facilities. When using pavement markings, the symbols should be placed 300 ft apart.

3.3 INSTITUTIONAL ARRANGEMENTS AND GUIDELINES

Planning, designing, and operating HOV facilities require the cooperation of multiple groups. The potential roles and responsibilities of federal, state, and local agencies, transit agencies, ride-share agencies, police, the court system, and voluntary groups are described in the following sections. (The source of the information, unless otherwise indicated, is Texas Transportation Institute, Parsons Brinckerhoff Quade and Douglas, Inc., and Pacific Rim Resources, Inc. [1998].)

3.3.1 Federal Government and Federal Agencies

Possible roles and responsibilities at the federal level are to create national transportation policies, programs, and requirements, and to authorize federal funding. The Federal Highway Administration (FHWA) and the Federal Transit Administration (FTA) are the organizations responsible for administering funding and overseeing programs. The responsibilities of the FHWA and the FTA, with respect to HOV projects, are to develop

rules and guidelines in accordance with legislation, review plans and designs, approve funding, and provide technical assistance.

3.3.2 State Government and State Departments Of Transportation

The state government determines state transportation policies and plans, establishes programs, and provides funding. Examples of funding mechanisms include gasoline taxes. Programs that may be implemented by the state government include land use restrictions and trip reduction requirements.

The state's department of transportation (DOT) is usually in charge of planning, designing, constructing, operating, and maintaining the interstate highways and state roadways within the state's borders. The state's DOT may also be involved with airports, ports, ferries, railways, and public transit. HOV facilities on freeways and state-owned roadways primarily fall under the jurisdiction of the state's DOT. Additional responsibilities may include coordinating various agencies and involving the public.

For the development of an HOV operation and enforcement plan, the state's DOT may have the responsibility of developing the plan. They may also staff a multi-agency committee.

If the HOV facility is to be built on a freeway or separate right-of-way, the state's DOT is usually in charge of overall project management. However, the state's DOT may only play a supporting role if the transit agency is the lead organization for a project with a separate right-of-way. The design of the HOV facility on the freeway is the responsibility of the state's DOT.

3.3.3 Metropolitan Planning Organizations

The main roles of a metropolitan planning organization (MPO) are to conduct the planning process, develop and choose plans and policies for both the long-term and short-range improvement programs, and coordinate multiple agencies and public involvement. The planning process should be of the "3-C" variety — continuous, cooperative, and coordinated.

3.3.4 Transit Agencies

The public transportation system is the responsibility of transit agencies. These organizations plan, design, implement, and operate the mass transit systems, which may encompass rail, bus, carpool, and vanpool services. Funding for these services may come from federal, state, and local monies and revenues from users. The lead responsibility of HOV facilities in separate rights-of-way often falls to the transit agencies. A supporting role is usually played when the facility is located on freeways or arterial streets. Additional potential responsibilities of transit agencies include enforcing vehicle eligibility and occupancy requirements on the HOV facility.

In terms of the HOV operation and enforcement plan, transit agencies may assist with plan development and assist with facility enforcement.

3.3.5 Local Municipalities

Local municipalities, which include cities and counties, have jurisdiction over local roadways. They are responsible for planning, design, construction, funding, and operation of these streets. When an HOV facility is located on an arterial street, local municipalities usually have the lead responsibility. A supporting role is played when the HOV facility is located on a freeway or separate right-of-way. Land use and development are usually controlled by the local government.

With regard to development of the HOV operation and enforcement plan, local municipalities may have the lead responsibility or assist another lead organization. They may also supply staffing for a multi-agency team.

3.3.6 Rideshare Agencies

The primary purpose of rideshare agencies is to provide technical assistance and services to both public agencies and private businesses. These organizations may also help with the development of the HOV operation and enforcement plan and participate on a multi-agency team.

3.3.7 State and Local Police

The police enforce regulations on the HOV facilities. They may aid in the development of the operation and enforcement plans and the design of any enforcement elements to be incorporated into the facility.

3.3.8 Judicial System — State and Local Courts

The courts have two main responsibilities relating to HOV facilities. The first focuses on enforcement of restrictions on the HOV facility. The court system must determine the constitutionality of enforcement methods and fines. The second job of the courts is to handle lawsuits brought against the project by businesses, neighborhoods, or other groups.

3.3.9 Transportation Management Organizations, Transportation Management Associations, Downtown Councils

These are voluntary organizations, usually composed of the area's major employers. These groups may promote transportation improvements, coordinate programs among their members, and provide financial aid to projects.

3.4 LEGAL ISSUES

In 1986, existing or previously planned highways could not be converted into toll facilities if they were partially or fully financed by federal funds. Exceptions to this rule could be granted by only congressional approval. Texas state law requires current free access facilities to remain toll free (Walton, Souleyrette, and Mahmassani 1986).

3.5 ASSESSMENT OF EFFECTIVENESS

The following aspects should be considered in evaluating an HOV facility: efficiency, safety, cost effectiveness, public acceptance and use, ability to enforce access and use restrictions, ability to manage incidents quickly and efficiently, and accessibility.

Turnbull, Henk, and Christiansen (1991), Bracewell et al. (1999), and Wu and Chen (1999) have proposed methodologies for evaluating HOV facilities. Turnbull, Henk, and Christiansen focused on HOV lanes in Texas; Bracewell et al. concentrated on the greater

Vancouver area of British Columbia; Wu and Chen reported on Los Angeles County, California.

The first step in evaluating an HOV project or similar major project is to clearly state the project goals and objectives and identify the measures of effectiveness. Data for the facility being studied, parallel routes, and a control freeway corridor should be collected and evaluated.

Once the objectives have been clearly stated, methods to evaluate the success of the HOV facility have to be developed. The three evaluation teams reached similar conclusions about the data that would be required. Traffic counts, vehicle occupancy counts, bus ridership, travel time runs, accident rates and severity, violation rates, costs, and surveys provided the necessary information.

Person-carrying capacity can be evaluated by performing traffic and vehicle occupancy counts on the HOV lane, general purpose lanes, control freeway, and parallel routes (Turnbull, Henk, and Christiansen 1991). From this data, the actual and percentage change in the person-movement efficiency, average vehicle occupancy rate, carpools and vanpools, and bus ridership for the total freeway facility can be calculated. Turnbull, Henk, and Christiansen (1991) recommended threshold levels of a 10 percent increase in average vehicle occupancy, 20 percent increase in carpoolers, and 10 percent increase in bus riders for the HOV facility to be successful. The basis for these thresholds appears to be arbitrary, though it likely reflects the expectations of the sponsoring agency.

Impacts on air quality and energy consumption are difficult to measure directly, but can be coarsely estimated using computer simulation. Data needed for the simulation included: survey responses, vehicle and occupancy counts, and travel time runs. Ideally, the HOV facility should reduce emissions, fuel consumption, and vehicle hours.

To determine whether the HOV facility increases the bus operating efficiency, Turnbull, Henk, and Christiansen (1991) suggested looking at vehicle productivity, bus schedule adherence, and safety. The specific data needed included bus service levels, operating costs per vehicle mile, per passenger, and per passenger mile, on-time performance, bus accident rates and severity, and changes in labor and fuel costs. The threshold levels that were identified were a 5 percent improvement in vehicle productivity and schedule adherence of 95 percent.

In order to evaluate travel time savings and reliability, Turnbull, Henk, and Christiansen (1991) recommended performing travel time runs on both the general purpose and HOV lanes. A rule of thumb is that for the HOV facility to be effective, the time savings should be one minute per mile and the reliability should be better than it was before the HOV facility was constructed. According to Bracewell et al. (1999), reliability can be determined from the standard deviation of travel time.

The success of an HOV facility in meeting the objective of increasing the per lane efficiency of the total freeway can be determined by comparing the before and after peak hour per lane efficiencies. The data required included vehicle and occupancy counts and travel time runs. Turnbull, Henk, and Christiansen (1991) suggested a minimum improvement of 5 percent. Wu and Chen (1999) reported that currently Caltrans evaluates the volume to capacity ratio, level of service, and the number of general purpose lanes required to move people using the HOV lane.

To determine whether the HOV facility excessively impacts the operation of the general purpose lanes, Turnbull, Henk, and Christiansen (1991) recommended comparing the level of service on these lanes before and after the addition of the HOV lane. The required data included vehicle and occupancy counts and travel time runs. The objective of not unduly impacting the safety of general purpose lanes can be monitored by number and severity of accidents or accident rates.

The benefit-cost ratio can determine whether the HOV facility is a cost-effective transportation improvement. Because of the numerous non-quantifiable benefits, Turnbull, Henk, and Christiansen (1991) suggested using travel time savings as the major benefit. The ratio should be greater than one.

In order to monitor public support for the HOV facility, Turnbull, Henk, and Christiansen (1991) suggested using opinion surveys of HOV users and nonusers, the general public, and policy makers. In addition to surveys, they recommended violation rates of less than 10 to 20 percent.

The methodologies reviewed were based on HOV facilities that already exist. Khattak and Renski (1999) have developed a computer-based tool to aid with the prediction of the success of a new HOV facility. This software implements case-based reasoning with digital mapping and spatial analysis available from geographic information systems (GIS).

The goal of the software program is to allow the user to examine traffic data and political events related to previous HOV lane implementations that might be relevant to the user's current situation. The software operates off of a hierarchical classification structure. The base depends on the planning vector, which is defined by (1) the transportation improvement and its context and (2) a set of performance measures.

Before using the software, three preliminary steps must be taken. The first step is to identify the congested areas by looking at traffic speed, volume, direction, and density. Consideration should also be given to pollution, mobility, and other community-related issues. The second step is to determine the probable mode split, including the alternatives of drive alone, shared ride, and bus. Finally, the physical and operational characteristics of the potential HOV facility must be considered.

This computer-based approach interactively prompts the user for information at various stages, and attempts to match the user's responses with previously recorded information. Any historical cases that match the criteria, determined by the user, are presented for further examination. The user can then compare different scenarios and determine whether the HOV facility should be successful. The effectiveness of this procedure at predicting success has not been formally established.

3.6 CHAPTER SUMMARY

Guidelines for the operation and design of both freeway and arterial HOV facilities were discussed in this chapter. The roles of various agencies in the development of HOV lanes were also discussed, as were legal issues that may prevent HOV lanes from being converted to HOT facilities. Finally, methods of evaluating special-use lanes were discussed. The guidelines and selected evaluation techniques described in this chapter were used to develop and evaluate experimental networks with HOV and HOT lanes. The computer-based simulation experiments are described in the following chapter and the results and analysis are provided in Chapter 5.

CHAPTER 4. DYNAMIC TRAFFIC ASSIGNMENT

Dynamic traffic assignment has two major advantages over static traffic assignment for evaluating traffic networks with high-occupancy vehicle (HOV) and high-occupancy/toll (HOT) lanes. Static assignment cannot adequately model congestion because the locations and extents of queues and their associated delays cannot be identified. The users' responses to route guidance instructions cannot be depicted using static traffic assignment (Peeta 1994). Dynamic traffic assignment (DTA), however, allows for congestion modeling and route guidance. The time dimension is incorporated in DTA, thus allowing for speed and density calculations within a time interval. DTA formulations accommodate route changes over time in the modeling process. The following sections provide background on the traffic assignment methodology used for this study, modifications that were made to the software, and the experimental design.

4.1 INTRODUCTION TO DYNASMART

Dynamic Network Assignment Simulation Model for Advanced Road Telematics (DYNASMART) is a traffic simulation-assignment model developed at the University of Texas at Austin. This procedure is a hybrid of microscopic and macroscopic models. Microscopic models focus on individual drivers or vehicles and their interactions, which may be captured by car-following and gap acceptance theories. Macroscopic models, on the other hand, use aggregate equations relating principal traffic flow descriptors such as speed-concentration and flow. These models treat traffic as a compressible fluid. DYNASMART adopts the macroscopic equations for relating speed and concentration. The vehicles may be moving individually or in bunches according to the prevailing local speeds (Peeta 1994). The movement of individual vehicles is an aspect of the microscopic models that has been incorporated into the procedure.

DYNASMART has the capability to simulate traffic flow and dynamic route choice behavior. To accomplish these tasks, traffic flow models, network path processing, behavior rules, and information supply strategies are used (Abdelghany et al. 1999). Further details on

traffic simulation, traffic generation, travel time calculation, traffic control, and shortest path determination are provided in the following sections.

4.1.1 Traffic Simulation

A highway network can be represented as a series of links and nodes. The nodes represent intersections while the links may be an entire road or a small length of roadway. The use of smaller links allows the dynamics of traffic flow to be captured more accurately (Jayakrishnan, Mahmassani, and Hu 1994).

The conservation equation (below) is employed to represent the traffic:

$$\frac{\partial q}{\partial x} + \frac{\partial k}{\partial t} = g(x,t), \qquad \text{(Eq 4.1)}$$

where

q = flow (vehicles/hour),

k = density (vehicles/mile),

g = net vehicle generation rate (vehicles/hour/mile),

x = space, and

t = time.

DYNASMART tracks the position of each vehicle, which means there is no need to use the fundamental flow equation $q = kv$ to solve equation 4.1 — the procedure used by conventional models (Jayakrishnan, Mahmassani, and Hu 1994). The reason for not using the fundamental flow equation is based on the possibility of calculating unrealistic speeds when the links have a finite length (Chang, Mahmassani, and Herman 1985). The speed-concentration relation that is used to model the flow is a modified version of Greenshields' speed-concentration relation and is given below:

$$v^{ta} = \left(v^{fa} - v^{0a}\right)\left(1 - \frac{k^{ta}}{k^{ja}}\right)^{\alpha} + v^{0a}, \qquad \text{(Eq 4.2)}$$

where

v^{ta} = average speed on link *a* at time *t*,

k^{ta} = average density on link *a* at time *t*,

v^{fa} = mean free flow speed on link a,

v^{0a} = minimum speed on link a,

k^{ja} = jam density, and

α = parameter that indicates the sensitivity of speed to density.

Vehicles are moving during each time increment based on the prevailing speed of the link and the density from the previous time step. All of the vehicles in a given link are assumed to have the same speed. A minimum speed of 6 miles per hour is designated so that the simulation may continue even when the network has reached jam density; thus, "true" jam density is never reached in the simulation (Jayakrishnan, Mahmassani, and Hu 1994).

Prevailing density, as well as prevailing speed, plays a role in moving vehicles on the link. To calculate prevailing density, or density at the beginning of the time step, a discretized form of the conservation equation is used with the density and flows of the link in the previous time increment. Vehicle positions are updated according to the following equations:

$$\begin{aligned} x_j^t &= x_j^{t-1} - v_i^t \times \Delta t, \qquad && x_j^{t-1} / v_i^t > \Delta t; \\ x_j^t &= 0, && \textit{otherwise.} \end{aligned} \qquad \text{(Eq 4.3)}$$

where

x_j^t = distance of vehicle *j* from the end of the link at the end of time step *t*,

Δt = simulation time step length, and

v_i^t = speed of link *i* that vehicle *j* is on, during time step *t*.

Vehicles reaching the end of the link before the time increment ends are placed at the end of the link and may either proceed to the next link and continue traveling or join a queue if they cannot enter the next link. Traffic control features may be at the end of a link and

determine the number of vehicles that can move to downstream links. At these nodes, the driver decides which link to travel next (Jayakrishnan, Mahmassani, and Hu 1994).

4.1.2 Traffic Generation and Initial Path Assignment

The total demand generation is divided into subintervals. For instance, the entire demand may be produced over 35 minutes, which can be broken down into seven subintervals of 5 minutes each. Origin-destination (O-D) demand data is used to calculate the total generation for each zone during each subinterval. Once a vehicle has been generated, it is assigned to a randomly selected link in that zone. The destination of the vehicle is determined by the trip distribution fractions from the O-D data. Each zone that is considered a destination zone has a predetermined destination node that is assigned to each vehicle (Jayakrishnan, Mahmassani, and Hu 1994).

4.1.3 Travel Time Calculation

Link travel times are calculated at the end of each time increment. These values are then incorporated into the path trip time calculations (see Section 4.1.5). The link travel time consists of two components: (1) the moving time and (2) queue waiting time. Moving time is determined using the prevailing link speed and the link length that does not contain a queue, according to the equation:

$$Tm_i^t = \frac{L_i - Q_i^t \times l_c}{v_i^t} \qquad \text{(Eq 4.4)}$$

where

Tm_i^t = time spent moving for link *i* at time *t*,

L_i = length of link *i*,

Q_i^t = average queue length,

l_c = vehicle length, and

v_i^t = prevailing link speed.

If there is a queue at the end of the link, vehicles join the back of the queue at the prevailing speed. Queue waiting time incorporates time spent moving in queue. To

determine queue waiting time, the length of the queue is divided by a "moving average of the discharge rate over a specified number of time steps" (Jayakrishnan, Mahmassani, and Hu 1994).

4.1.4 Traffic Control

DYNASMART has the capability to simulate a variety of control elements. Surface streets can be modeled with no control, stop signs, pretimed, pretimed coordinated, multidial pretimed, and fully actuated signals. The freeway system may have ramp metering and variable message signs (Jayakrishnan, Mahmassani, and Hu 1994).

The amount of traffic that leaves a link at an intersection is constrained by (1) the capacity of the intersection and (2) the number of vehicles reaching the end of the link. The actual amount is the minimum of these two constraints. Traffic that is allowed to enter a link is constrained by the available physical space of the link and the inflow capacity of the link (typically 1800 x number of lanes) (Jayakrishnan, Mahmassani, and Hu 1994).

4.1.5 K-Shortest Paths

DYNASMART calculates multiple paths for each origin-destination (O-D) pair. The storage of more than one path allows for simulation of driver decision making. The *k*-shortest paths are found and stored at intervals from all nodes to each destination node. To find the *k*-shortest paths, DYNASMART employs a label-correcting algorithm using a double ended queue data structure (Jayakrishnan, Mahmassani, and Hu 1994). Given the travel times (or generalized costs) on each arc of the network, including penalties for turning movements, the algorithm solves for the least time (or cost) paths from all origins to each destination node, as well as the second, third, etc., up to the *k*-th least time (or cost) paths, where *k* is a user-specified value (equal to ten in the version of DYNASMART used in this study). In computing the shortest paths, the algorithm recognizes that different user types (e.g., HOVs versus SOVs) may incur different times (or costs) on each arc. The detailed implementation of the algorithm can be found in Ziliaskopoulos (1992).

Because congestion and resulting travel speeds on a link vary over time, the *k*-shortest paths are updated periodically, such as every three minutes of simulation time. In the interim between *k*-shortest path computations, the stored paths are updated every simulation interval

by summing the updated trip times (or costs) along each of the stored paths and resorting them accordingly (Jayakrishnan, Mahmassani, and Hu 1994).

4.2 MODIFICATIONS TO DYNASMART

To model high-occupancy/toll (HOT) lanes in DYNASMART, several modifications had to be made to the existing software. These changes included refining the capability to designate some lanes as HOV, modifying this designation to HOT, incorporating fees into the *k*-shortest path calculations, and developing a stochastic model for mode choices.

Interfacing the stochastic mode choice model with DYNASMART adds a new capability for a more complete assessment of travel demand management measures in a network. While previous work had incorporated stochastic choice models of departure time in DYNASMART (Hu and Mahmassani 1995), this study is the first to explicitly consider modal choices. Limited work has been available incorporating stochastic mode choice models into dynamic traffic assignment. Several mode choice models have been developed and applied to predicting the number of HOV users; for example, the Shirley model, developed for the Washington, D.C., area is fairly well known. Parkany (1999) developed a multinomial logit model to study the characteristics that influence mode choice for drivers on the priced 91 Express Lanes in California. The modifications made to DYNASMART for the purposes of this report enhance the behavioral capabilities of this traffic simulation-assignment tool.

4.2.1 HOT Lanes

The ability to designate some links for high-occupancy vehicles (HOVs) already existed in DYNASMART; however, some modifications had to be made to allow single occupancy vehicles (SOVs) to use these lanes for a fee and convert the HOV facility to a HOT facility. The requirement for being an HOV was removed and a generalized cost function that incorporates travel time and tolls was created. Tolls charged to SOVs were based on a value of $.10/minute ($6.00/hr); this user-specified value comes from 50 percent of the average hourly way (Small 1992) which Acha-Daza (1998) estimated to be $12.00. The monetary toll was converted to a time cost using the previously mentioned conversion. The additional time cost was taken into account in the determination of the *k*-shortest paths.

4.2.2 K-Shortest Path

Drivers are assumed to choose the path from their origins to their destinations based on the least generalized cost at the beginning of their trips. To differentiate between SOVs and HOVs, a special purpose implementation of the *k*-shortest path algorithm was incorporated into DYNASMART. For SOVs, two sets of paths were generated. The first set ignored the HOT lanes by charging an extremely high fee on the link for SOVs. In this manner, all of the SOVs were assigned to the general-purpose network. The second set of paths allowed SOVs to consider the HOT links in addition to the general purpose links. In the determination of the second set of paths, both fees and travel time were considered. Using this procedure, the driver compared the paths on the general purpose network with the paths that include the HOT lanes (Abdelghany et al. 1999).

Only one set of paths was generated for HOVs. This vehicle class was granted free access to all of the links in the network. The chosen path may or may not have included HOT lanes (Abdelghany et al. 1999).

4.2.3 Stochastic Mode Choice

A multinomial logit (MNL) model was developed to determine the split of vehicles that operate as SOVs and HOVs. Previously, the mode choices were assigned strictly by a predetermined percentage of the traffic stream. The multinomial logit model is based on the concept that there is a utility (U) associated with each available travel mode (i) for each individual (n):

$$U_{in} = V_{in} + \varepsilon_{in}, \qquad \text{(Eq 4.5)}$$

where

V = the deterministic component and is a function of the traveler and mode characteristics, and

ε = an error term that accounts for random perceptions and unobserved factors distributed across the population.

Several assumptions about the error term lead to this multinomial logit model. The first assumption is that the error term is gumbel distributed. This distribution is preferred by

some over the normal distribution because of simpler calculations in the context of maximization and a closed form probabilistic choice model. The second assumption about the error components is that they are identically and independently distributed across both alternatives and individuals/observations. This assumption indicates that the variances of the error terms are the same for every individual and every alternative and that there is no correlation among the error terms from alternative to alternative and individual to individual (Ben-Akiva and Lerman 1985).

The previous assumptions led to the multinomial logit model structure. The MNL model provides the probabilities of choosing alternatives based on the deterministic components of the utility functions according to the following equation:

$$\Pr_n(i) = \frac{\exp(V_{in})}{\sum_{j=1}^{J} \exp(V_{jn})}, \qquad \text{(Eq 4.6)}$$

where

$Pr_n(i)$ = probability of the individual n choosing alternative i,

V_{in} = deterministic component for alternative i,

V_{jn} = deterministic component for alternative j, and

J = set of all possible alternatives.

While the deterministic portion of the utility function may incorporate characteristics of both the traveler and mode, for the purposes of the simulation, the network user characteristics were incorporated into a constant. The travel time and cost associated with a given mode were grouped using the generalized cost function.

Before a vehicle began a trip, it was assumed that the driver had perfect information on the current traffic conditions and HOT lane fees. The generalized cost was used in the utility function and the decision of whether to use the HOT lanes was made at the beginning of the trip. For the purposes of this study, pricing was allowed to vary only with congestion levels. The drivers were not allowed to deviate from their paths chosen at the beginning of the trip, but travel condition information was continually updated and used by travelers who left at a later time.

4.3 DESIGN OF EXPERIMENT

As described in Chapter 2, many different configurations of HOV lanes are used in the United States. Some of the aspects identified in the case studies (found in chapter 2) were explored using the dynamic traffic assignment software DYNASMART. Both HOV and HOT lanes were considered with the same lane configurations. The tolls were assumed to be collected electronically with no influence on the freeway travel speeds. The test network and the variables examined are described in the following sections.

4.3.1 Test Network

The network used for experimentation was based on the south-central corridor in the Fort Worth, Texas area. The original network (Network 0) consisted of 178 nodes and 441 links (see Figure 4.1). Twenty-five of these arcs represent I-35W, while the rest of the links are for the surrounding arterial network. The freeway links originally consisted of four lanes each. The number of lanes on the arterial streets varied from one to four, but remained constant throughout the experimentation process. Signalization was provided on the arterial roads, but was not modified during the experiment.

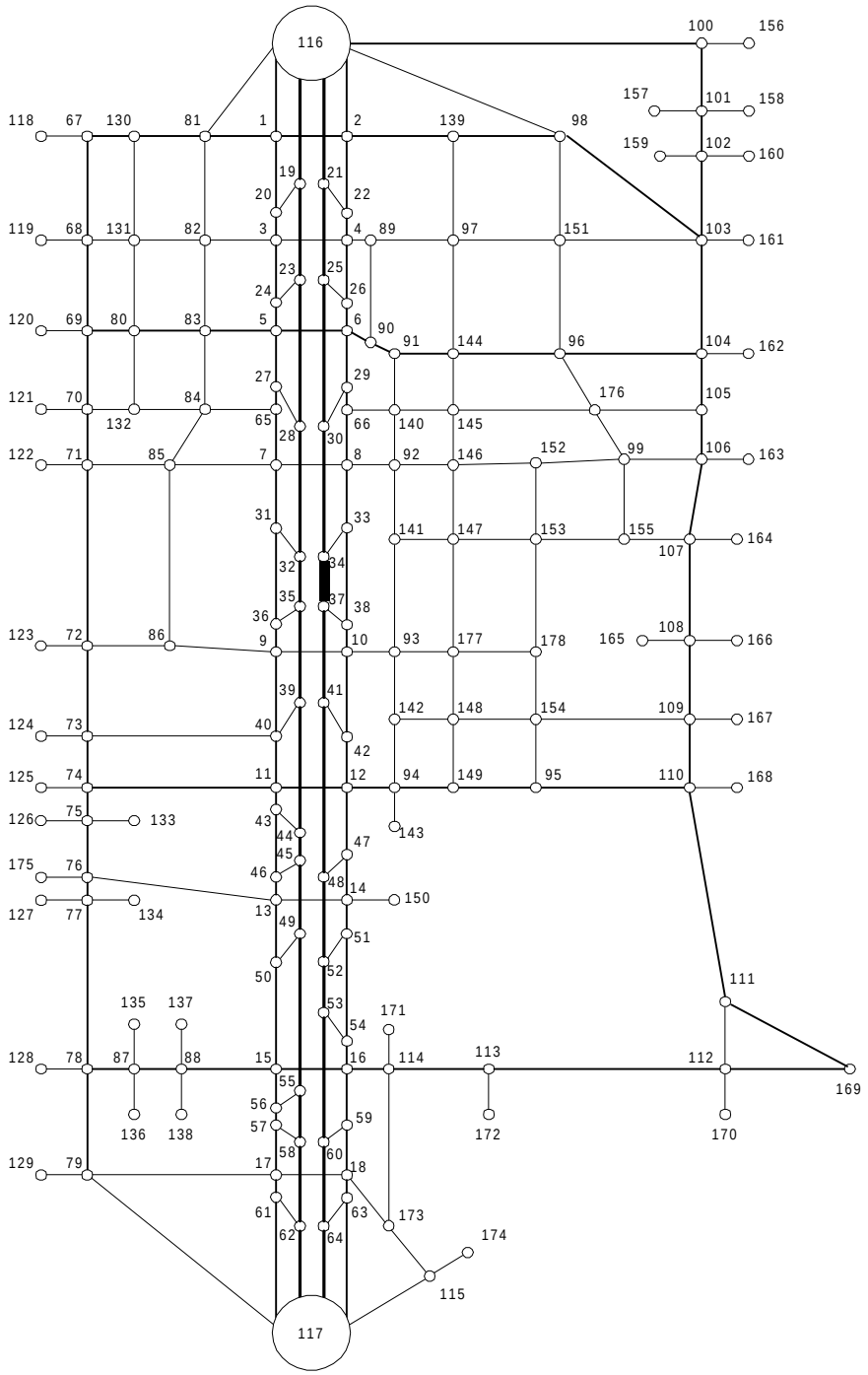

Figure 4.1 Network 0 — I-35W, Fort Worth, Texas

4.3.2 Experimental Factors

This section describes the experimental factors to be examined: lane utilization, accessibility, access restrictions, pricing, demands, and mode splits.

4.3.2.1 Lane Utilization. The only lanes that were altered in the experimentation process were the freeway lanes. Two types of HOT lanes were examined. The special lanes could be concurrent flow facilities, in which case one lane was taken from the original four general purpose lanes and restricted; thus resulting in three general purpose lanes and one HOT lane. Additional variations on the concurrent flow facilities were considered because of congestion in certain sections. Two modifications that were considered were adding additional general purpose lanes and HOT lanes to the central part of the freeway. The other alternative considered was a reversible facility where the HOT lane(s) operate in peak period direction only. In the second scenario, the original freeway remained intact and the special lanes were assumed to be built in the median. Table 4.1 provides a summary of the network structures.

4.3.2.2 Accessibility. Four types of physical access were examined for the HOT facility. In the first pattern, access was granted only at the endpoints of the facility; no intermediate entrance or exit points were provided. In the second pattern, there were two intermediate points provided in both directions of the HOT lanes. The third pattern allowed access and egress to and from the HOT lanes at each of the on and off ramps of the freeway. Finally, special ramps were considered from the arterial directly to HOT lanes located in the median. Table 4.1 shows the access patterns used in each of the networks.

4.3.2.3 Access Restriction (HOV versus HOT). Two alternate forms of special lanes were examined. In the first case, only high-occupancy vehicles were permitted on the lane. In the second scenario, single occupancy vehicles were permitted to use the lane for a fee (HOT).

Table 4.1 Summary Description of Networks

Network	Type of HOV /HOT Lane	# of HOV/ HOT Lanes	# of GP Lanes	Direction	Location	Access
0	None	0	4	NB, SB	NA	NA
1	Concurrent	1	3	NB, SB	Freeway	Pattern 1
2	Concurrent	1	3	NB,SB	Freeway	Pattern 3
3	Concurrent	1	3	NB, SB	Freeway	Pattern 2
4	Reversible	2	4	NB	Median	Pattern 4
5	Reversible	1	4	NB	Median	Pattern 4
6	Concurrent	1	3 at ends, 4 in middle (SB only)	NB, SB	Freeway, Median	Pattern 3
7	Concurrent	1 at ends, 2 in middle (SB only)	3	NB, SB	Freeway, Median	Pattern 3
8	Concurrent	1	3 at ends, 4 in middle	NB, SB	Freeway, Median	Pattern 2
9	Concurrent	1 at ends, 2 in middle	3	NB, SB	Freeway, Median	Pattern 2

Figures 4.2 through 4.10 show the modifications made to the freeway of Network 0.

4.3.2.4 Pricing. The fees were linearly dependent on the vehicular density of the HOT lane; the formula used was constant "C" x (lane density). The lane density was given in vehicles per mile per lane. The units of the constant "C" were minutes per vehicle per mile per lane. The toll was converted directly to time units by the constant. The values considered for "C" were 0, 0.01, 0.05, 0.10, 0.5, and 0.8. Because of the volumes of traffic used, the costs were in the range of 0.25 min to 3.0 min per mile or $0.025 to $3.00 per mile. Values of "C" greater than 0.8 showed insensitivity to price and, therefore, were not pursued.

The value of "C" was not varied with time within a given simulation. The tolls did change as the simulation progressed because congestion on the HOT lanes varied over time.

4.3.2.5 Demand Levels. Three different demand levels were evaluated. The first two were uniform loadings over the 35 minutes of trip generation time. The first level was 13,599 vehicles. The second level generated 15,726 vehicles. The third demand file represented a staggered loading that would be found near the peak of the peak period hour and provided 18,227 vehicles. All three files were designed so that more traffic would be

generated with the central business district as the destination rather than the southern zones as the destination.

4.3.2.6 Mode Splits. The mode choice was determined using the MNL model described in Section 4.2.3 and a data set from a household activity survey conducted by the Central Planning Staff for the Boston metropolitan region in April 1991. Two different constants for the shared ride mode were considered. These constants account for characteristics of the mode and user that are not captured by the sensitivity to time. The first set of equations employed was:

$$V_{SR} = -2.169 - 0.04722 \times (Gen.Cost) \qquad \text{(Eq 4.7)}$$

$$V_{DA} = -0.04722 \times (Gen.Cost) \qquad \text{(Eq 4.8)}$$

where

V_{SR} = the deterministic part of the utility for the shared ride mode,

$Gen.Cost$ = the generalized cost of the mode, and

V_{DA} = the deterministic part of the utility for the drive alone mode.

The generalized cost for the shared-ride mode was simply in-vehicle travel time, while the generalized cost for the drive-alone mode included both in-vehicle travel time and roadway usage fees. The second set of equations employed was:

$$V_{SR} = -1.5 - 0.04722 \times (Gen.Cost) \qquad \text{(Eq 4.9)}$$

$$V_{DA} = -0.04722 \times (Gen.Cost) \qquad \text{(Eq 4.10)}$$

where the variables were defined as in the first set of equations.

The second set of equations resulted in a higher number of people selecting the shared ride mode (HOVs).

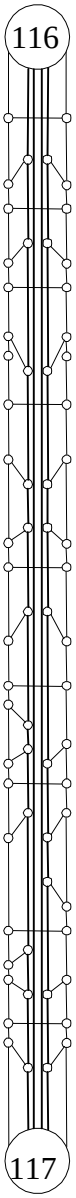

Figure 4.2 Network 1

One HOV/HOT lane was added from node 117 to 116 and from node 116 to 117. Access is granted only at those nodes.

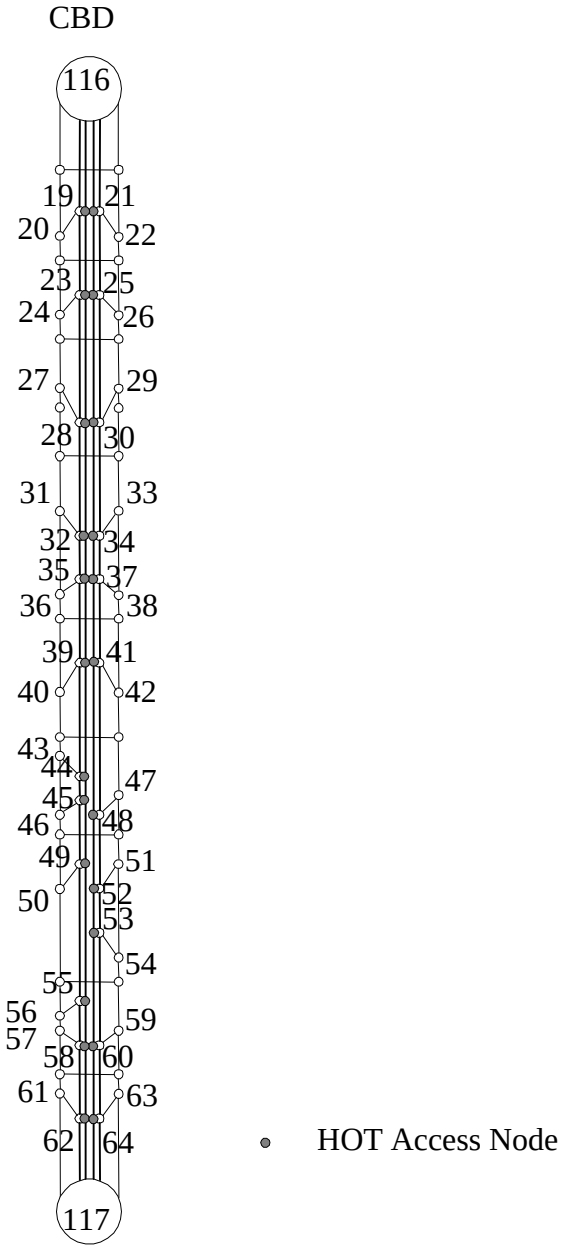

Figure 4.3 Network 2

HOV/HOT lanes extend from 117 to 116 and 116 to 117 with access points corresponding to freeway access points.

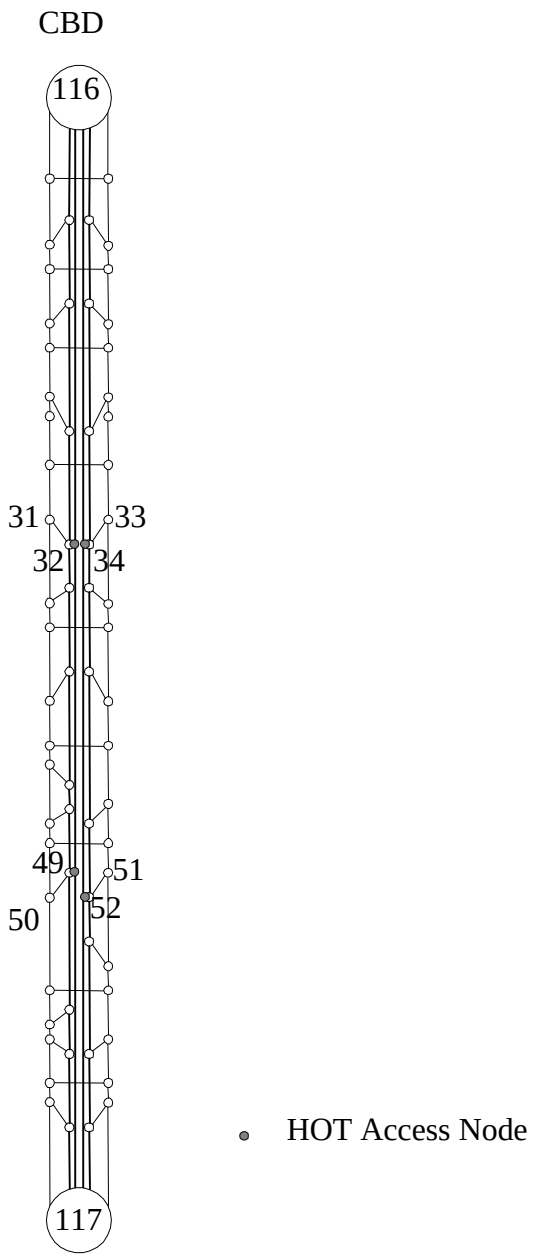

Figure 4.4 Network 3

HOV/HOT lanes extend from 117 to 116 and from 116 to 117. The access points, in addition to the end nodes, are shown.

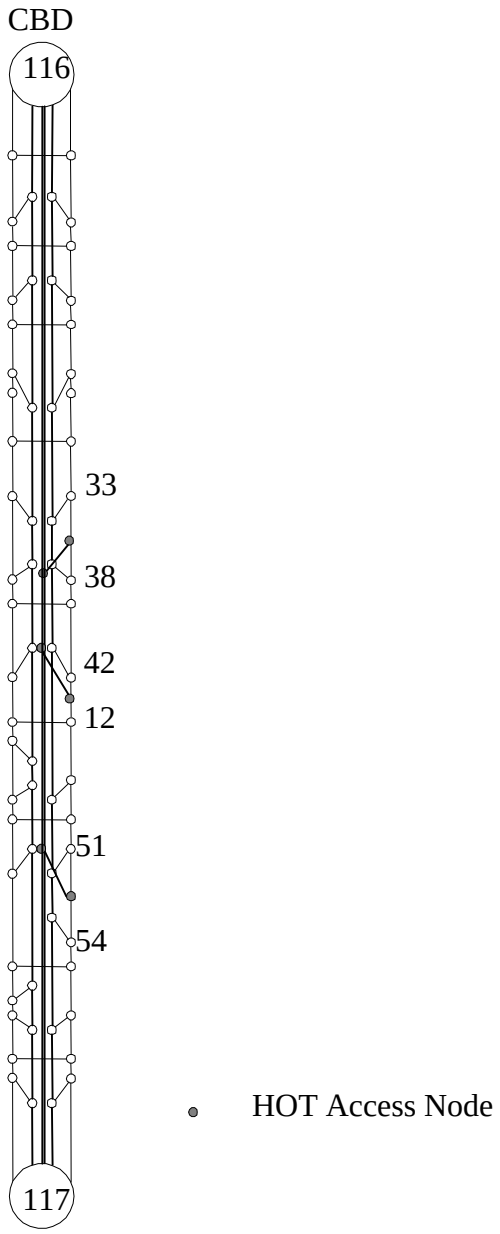

Figure 4.5 Network 4

Two HOV/HOT lanes operate in the peak period direction (from 117 to 116). The lanes are in the median of the freeway and have separate access ramps in addition to access from end nodes.

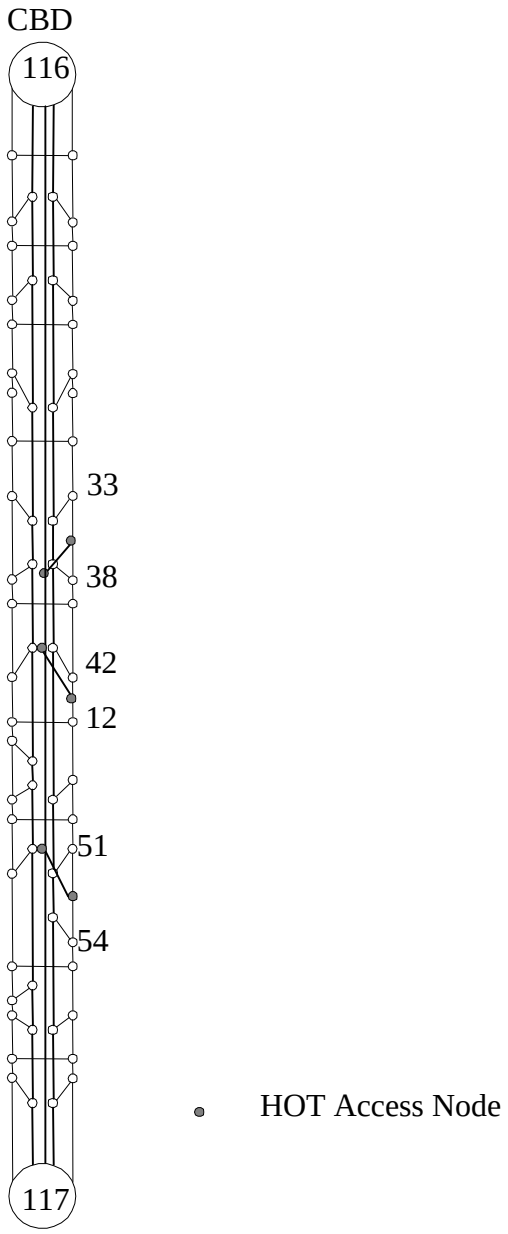

Figure 4.6 Network 5

One reversible HOV/HOT lane operates in the peak period direction (from 117 to 116). Access is granted from special ramps and the end nodes.

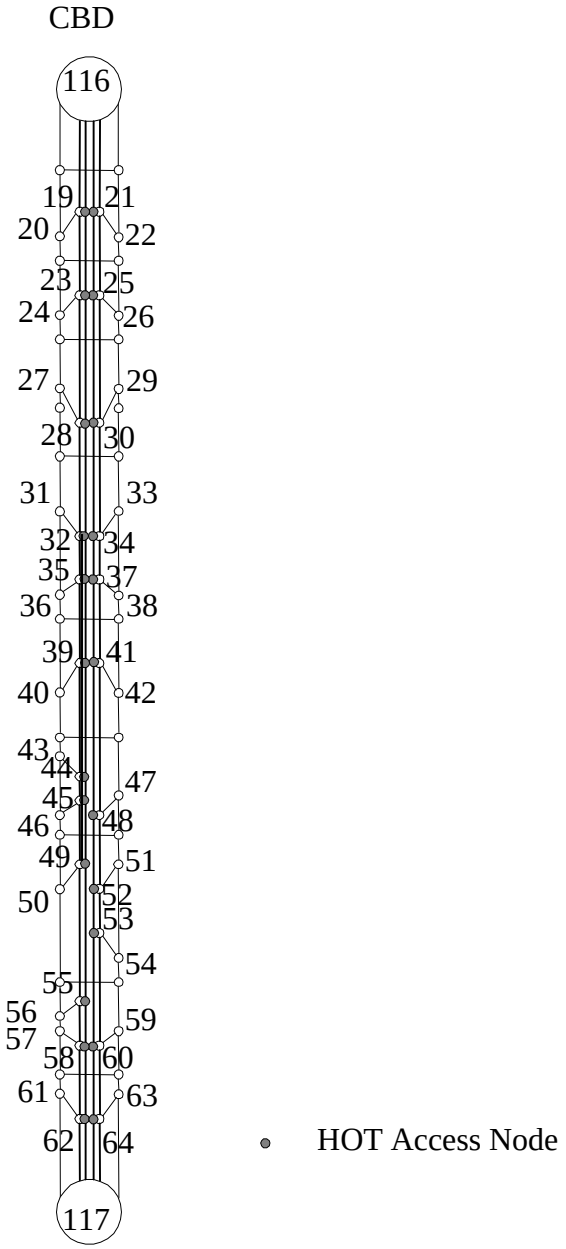

Figure 4.7 Network 6

Network 6 differs from Network 2 (Figure 4.3) in that there is an additional general purpose lane from node 32 to node 49.

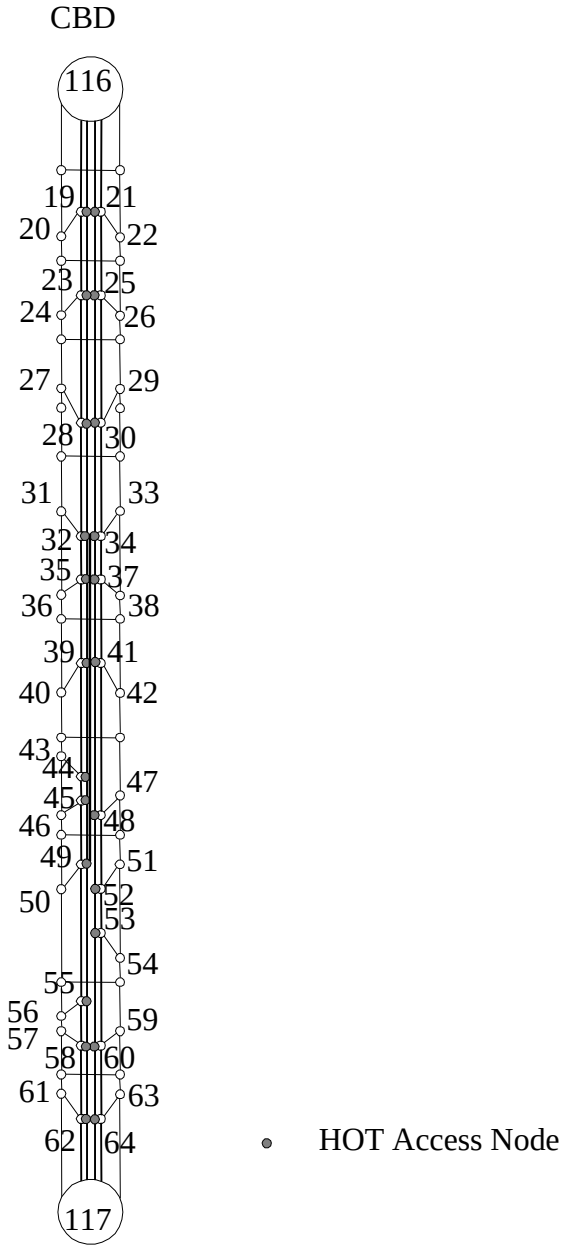

Figure 4.8 Network 7

Network 7 differs from Network 2 (Figure 4.3) in that there is an additional HOV/HOT lane from node 32 to node 49.

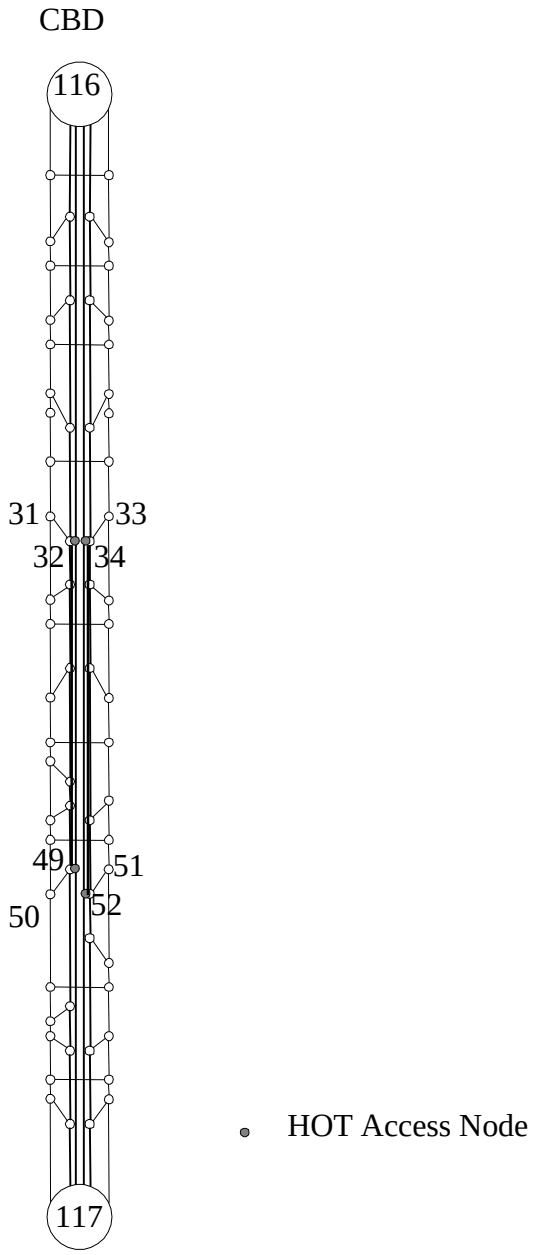

Figure 4.9 Network 8

Network 8 differs from Network 3 (Figure 4.4) in that there is an addition general purpose lane from node 32 to node 49 and from node 52 to node 34.

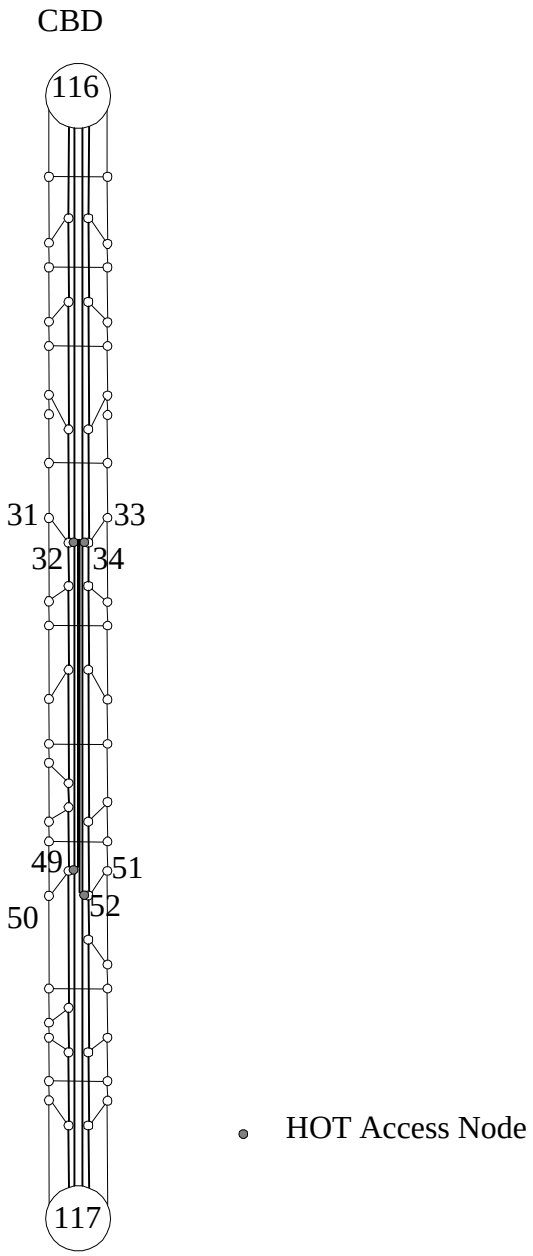

Figure 4.10 Network 9

Network 9 differs from Network 3 (Figure 4.4) in that there is an additional HOV/HOT lane between nodes 32 and 49 and between nodes 52 and 34.

CHAPTER 5. DATA AND ANALYSIS

This chapter discusses the results of the computer simulation experiments. These results are analyzed with respect to the effect of high-occupancy vehicle (HOV)/high-occupancy vehicle/toll (HOT) lane configuration, access points, vehicle eligibility, demand, pricing, and characteristics of the traveler and travel mode not captured by sensitivity to cost in the utility function for mode choice.

5.1 LANE CONFIGURATION AND ACCESS POINTS

The average trip time is used as the principal measure of the effectiveness of various lane configurations and access points. The base conditions are provided by network 0, which has no HOV/HOT lanes. All of the other networks can be compared to the original network.

As a reminder, networks 1-9 are described in detail in chapter 4. Network 1 has one HOV/HOT lane in each direction extending the length of the network. Access and egress are only permitted at the endpoints. Network 2 has one HOV/HOT lane in each direction extending the length of the network. Wherever vehicles are allowed to enter or exit the freeway, they may also enter or exit the HOV/HOT lanes. Network 3 also has one HOV/HOT lane in each direction for the entire length of the network; access and egress are only permitted at two intermediate points in each direction, in addition to the endpoints. The HOV/HOT lanes for networks 1, 2, and 3 were originally general purpose freeway lanes, thus reducing the number of freeway main lanes from four to three. Network 4 has two northbound HOV/HOT lanes and no southbound ones. One of these northbound lanes was originally a freeway mixed-traffic lane, and the other was built in the median. Access to this facility is permitted at the endpoints and at designated ramps from the access road. Network 5 is similar to network 4, except that the lane in the median was not constructed, so only one HOV/HOT lane is in operation. Network 6 is similar to network 2, except an additional general purpose lane was added to the southbound freeway in the middle of the network. Network 7 is also similar to network 2, except an additional HOV/HOT lane was added in the middle of the network in the southbound direction. Networks 8 and 9 are similar to

network 3, but have an additional general purpose lane and HOV/HOT lane, respectively, in the middle section in each direction.

Table 5.1 provides the average trip times for the various networks when low demand (13,599 travelers) is used and the characteristics of the traveler and travel mode make ridesharing more desirable. Table 5.2 shows the relative difference in average travel times of each network from network 0.

Table 5.1 Average Trip Times (min) for Various Networks Under Low Demand, Higher Desirability of Ridesharing

Price:	C = 0	C = 0.01	C = 0.05	C = 0.10	C = 0.50	C = 0.80	C = 999999
Network 0	11.41	11.41	11.41	11.41	11.41	11.41	11.41
Network 1	9.96	10.38	10.01	10.04	9.92	9.92	10.26
Network 2	11.87	10.37	10.30	10.29	10.29	10.29	10.12
Network 3	10.64	9.89	9.87	9.86	9.95	9.95	9.96
Network 4	10.91	10.81	10.98	10.98	10.84	10.84	10.43
Network 5	10.95	10.99	10.99	10.99	11.03	11.03	10.43
Network 6	10.99	10.70	10.81	10.81	10.81	10.81	10.01
Network 7	11.23	10.56	10.28	10.28	10.28	10.28	10.10
Network 8	10.57	9.85	9.70	9.70	9.70	9.70	10.05
Network 9	10.41	9.66	9.52	9.58	9.62	9.65	10.45

Note that “C” in these tables is the constant for the linear generalized cost formula (see section 4.3.2.4). “C” is not given here in terms of dollars, but is in the units of minutes/vehicle/mile/lane. When C=0, there is no cost to any of the travelers and all lanes are available to everyone. At the other extreme, C=999999, the cost is so high, the HOT lanes become HOV lanes.

Table 5.2 Percent Difference in Average Trip Times from Network 0 under Low Demand, Higher Desirability of Ridesharing

Price:	C = 0	C = 0.01	C = 0.05	C = 0.10	C = 0.50	C = 0.80	C = 999999
Network 1	12.71	9.00	12.30	12.00	13.02	13.02	10.08
Network 2	-4.66	10.05	11.14	11.12	11.26	11.26	12.59
Network 3	6.52	14.62	14.95	15.09	14.23	14.23	14.30
Network 4	4.69	6.06	4.40	4.41	5.68	5.73	9.84
Network 5	4.20	3.85	3.83	3.83	3.45	3.46	9.40
Network 6	3.81	6.44	5.46	5.46	5.44	5.44	13.45
Network 7	1.60	7.94	10.48	10.48	10.48	10.48	13.08
Network 8	7.47	14.81	16.66	16.63	16.61	16.61	13.44
Network 9	9.45	17.72	19.52	18.85	18.49	18.11	9.55

Under the no-cost condition, network 1 provided the most time savings, while network 2 provided the least. This result suggests that a smaller number of access points is more beneficial to the overall network travel time than continuous access.

As expected, networks with more lanes performed better than networks with fewer. Networks 6 and 7 had lower average trip times than network 2; networks 8 and 9 saved more time than network 3; and network 4 outperformed network 5. The additional capacity provided by these added lanes was able to handle more of the demand. However, the networks with additional capacity did not fare better than network 1, which suggests that the number of access points may be more influential than the number of lanes under these conditions.

When a fee is assessed to single occupant vehicles (SOVs), network 9 provides the lowest average trip times while network 5 provides the highest. Network 9 contains the most mileage of HOT lanes, while network 5 has the least. Under the conditions being examined (low demand, higher carpooling attractiveness), the amount of space dedicated to special lanes is important. Network 9 performs better than network 8, which further supports the previous statement because the overall mileage is the same, but the additional lanes serve different purposes. Since networks 4 and 5 are the lowest performing of the nine, there may be sufficient HOV demand to operate special lanes in both directions instead of just one. This result can be further generalized to say that there is not enough of a directional split to warrant the use of reversible or contraflow facilities.

Tables 5.3 and 5.4 provide respectively, the average travel times and relative difference in average travel times from network 0 for the medium-demand and higher desirability of ridesharing.

Table 5.3 Average Trip Times (min) for Various Networks Under Medium Demand, Higher Desirability of Ridesharing

Price:	C = 0	C = 0.01	C = 0.05	C = 0.10	C = 0.50	C = 0.80	C = 999999
Network 0	12.95	12.95	12.95	12.95	12.95	12.95	12.95
Network 1	12.05	12.09	11.79	11.83	12.03	12.03	12.66
Network 2	12.61	11.42	11.18	11.18	11.18	11.18	12.24
Network 3	12.75	12.83	12.80	13.43	13.95	13.42	11.51
Network 4	12.00	12.03	12.09	12.11	12.07	12.08	12.81
Network 5	11.55	11.90	12.03	12.03	11.89	11.90	12.81
Network 6	12.76	12.03	12.16	12.16	12.17	12.17	11.56
Network 7	12.41	11.39	11.76	11.79	11.80	11.80	12.24
Network 8	12.42	12.16	12.15	11.96	12.19	12.29	11.51
Network 9	12.79	12.63	13.27	13.25	13.07	13.08	11.56

Table 5.4 Percent Difference in Average Trip Times from Network 0 under Medium Demand, Higher Desirability of Ridesharing

Price:	C = 0	C = 0.01	C = 0.05	C = 0.10	C = 0.50	C = 0.80	C = 999999
Network 1	6.92	6.61	8.95	8.64	7.10	7.10	2.22
Network 2	2.85	12.63	15.03	14.98	14.73	14.73	5.63
Network 3	1.58	1.05	1.32	-4.29	-8.90	-4.22	11.74
Network 4	7.43	7.15	6.75	6.25	6.31	6.47	1.21
Network 5	11.71	8.77	7.60	7.58	8.77	8.68	1.09
Network 6	1.63	7.72	6.60	6.56	6.60	6.59	10.84
Network 7	4.26	12.96	9.76	9.50	9.46	9.46	6.17
Network 8	4.28	6.98	6.85	8.40	6.48	5.61	11.81
Network 9	1.30	2.67	-2.64	-2.47	-0.96	-1.05	12.10

Under this higher-demand scenario, the performance of the networks differs from the lower-demand case. There were several more cases where the network with an HOV/HOT lane had higher average trip times than network 0; specifically, networks 3 and 9 for C = 0.1, 0.5, and 0.8 and network 9 for C = 0.05. The higher demand results in more SOVs than HOVs, which causes variation in the performance of the networks.

For the case where no cost is involved, network 5 provides the most travel time savings over network 0, while network 9 provides the least. All of the networks offer improved time. For networks 4, 6, 7, 8, and 9, this result can be at least partially explained by the addition of roadway capacity. According to the results provided by networks 1, 2, 3, and 5, which have no added capacity, the access points to the special lanes must also play a role in managing the traffic flow and helping to improve travel times.

When there is cost involved, network 2 and the similar network 7 provide the lowest trip times. These networks provide the most access points to the HOT lanes. Under the medium demand, continuous access provides the greatest benefit to the system. Networks 3 and 9 perform the least favorably for the system as a whole under this demand and mode split scenario, suggesting that there has been too much space allocated to HOVs for the mode split provided and sheer number of SOVs.

Tables 5.5 and 5.6 provide the average travel times and relative difference in average travel times, respectively, from network 0 for the high demand and higher desirability of ridesharing.

Table 5.5 Average Trip Times (min) for Various Networks Under High Demand, Higher Desirability of Ridesharing

Price:	C = 0	C = 0.01	C = 0.05	C = 0.10	C = 0.50	C = 0.80	C = 999999
Network 0	15.29	15.29	15.29	15.29	15.29	15.29	15.29
Network 1	12.93	13.40	13.01	13.14	13.58	13.58	13.80
Network 2	15.21	16.48	15.80	15.81	15.81	15.81	14.55
Network 3	15.14	15.98	14.49	15.34	15.69	15.75	17.26
Network 4	15.40	15.28	14.57	14.56	14.58	14.55	13.97
Network 5	15.34	15.23	15.23	14.97	15.17	15.17	13.91
Network 6	16.40	14.94	15.54	15.59	15.59	15.59	14.71
Network 7	15.03	14.25	14.55	14.57	14.52	14.52	14.59
Network 8	15.00	13.70	13.96	13.78	14.93	14.93	18.10
Network 9	15.47	13.81	14.14	13.57	15.29	14.76	15.13

Table 5.6 Percent Difference in Average Trip Times from Network 0 under High Demand, Higher Desirability of Ridesharing

Price:	C = 0	C = 0.01	C = 0.05	C = 0.10	C = 0.50	C = 0.80	C = 999999
Network 1	15.42	12.34	14.88	14.05	11.18	11.18	9.74
Network 2	0.60	-8.93	-3.93	-3.96	-3.84	-3.84	5.36
Network 3	0.99	-4.22	5.06	-0.30	-2.54	-2.90	-13.56
Network 4	-0.75	0.08	4.98	4.75	4.54	4.69	7.65
Network 5	-0.32	0.40	0.43	2.19	0.82	0.82	9.89
Network 6	-7.27	2.28	-1.69	-2.04	-2.02	-2.02	4.18
Network 7	1.54	6.95	4.73	4.59	4.95	4.95	4.73
Network 8	1.93	11.11	9.09	10.32	2.47	2.43	-19.28
Network 9	-1.19	10.77	8.22	12.46	-0.03	3.55	0.89

The high-demand scenario experiences the least trip time under a different network configuration than the lower-demand scenarios. Network 1 consistently outperforms the other networks under all high-demand scenarios. With sufficient volumes generated at each endpoint, the special lanes without intermediate access provide the greatest benefit to the system. Accordingly, the network that incurred the highest trip time under the pricing conditions was network 2, which allows the most access points.

Under the no cost condition, network 6 yielded the highest trip times. The continuous access allowed by this configuration may have led to too many vehicles trying to switch between lanes. An interesting observation from the no-cost scenario is that the addition of lanes did not always result in lower trip times. In this case, the use of capacity and access become extremely important to overall system performance.

Tables 5.7 and 5.8 provide the average travel times and relative difference in average travel times, respectively, from network 0 for the low demand and lower desirability of ridesharing.

Table 5.7 Average Trip Times (min) for Various Networks Under Low Demand, Lower Desirability of Ridesharing

Price:	C = 0	C = 0.01	C = 0.05	C = 0.10	C = 0.50	C = 0.80	C = 999999
Network 0	11.41	11.41	11.41	11.41	11.41	11.41	11.41
Network 1	9.96	10.58	10.08	10.04	10.01	10.04	10.26
Network 2	11.87	10.50	10.51	10.51	10.51	10.51	10.12
Network 3	10.64	9.47	9.52	9.61	9.69	9.69	9.96
Network 4	10.91	10.90	10.90	10.93	10.90	10.90	10.43
Network 5	10.95	10.99	11.02	11.00	11.02	11.01	10.43
Network 6	10.99	10.53	10.64	10.64	10.64	10.64	10.01
Network 7	11.23	10.29	10.32	10.35	10.34	10.34	10.10
Network 8	10.57	9.55	9.95	9.99	9.99	9.99	10.05
Network 9	10.41	9.50	9.58	9.76	9.99	9.98	10.45

Table 5.8 Percent Difference in Average Trip Times from Network 0 under Low Demand, Lower Desirability of Ridesharing

Price:	C = 0	C = 0.01	C = 0.05	C = 0.10	C = 0.50	C = 0.80	C = 999999
Network 1	12.71	7.27	11.61	12.02	12.23	11.99	10.08
Network 2	-4.66	8.61	8.97	9.01	9.03	9.01	12.59
Network 3	6.52	18.52	17.96	17.17	16.41	16.38	14.30
Network 4	4.69	5.35	5.31	5.03	5.24	5.31	9.84
Network 5	4.20	3.82	3.60	3.75	3.59	3.68	9.40
Network 6	3.81	8.00	7.01	7.02	7.01	7.02	13.45
Network 7	1.60	10.59	10.24	9.91	10.03	10.03	13.08
Network 8	7.47	18.04	14.18	13.74	13.72	13.72	13.44
Network 9	9.45	19.98	18.40	16.48	14.20	14.29	9.55

Like the low demand level with a higher desirability for ridesharing, network 1 yields the lowest trip time for the case where there is no cost. Network 2 produces an average travel time higher than the base conditions when there is no cost for both ridesharing desirabilities. When no cost is incurred and demand is low, the more lanes that are available, the better the travel times for the system.

When fees are charged to the SOVs, network 3 has the lowest average trip times. The intermediate access points appear to be the best configuration for the lower demand with lower ridesharing desirability. On the other hand, network 5 seems to be the worst configuration. Two lanes in one direction are most likely a waste when both the demand for and attractiveness of carpooling are low.

Tables 5.9 and 5.10 provide the average travel times and relative difference in average travel times, respectively, from network 0 for the middle demand and lower desirability of ridesharing.

Table 5.9 Average Trip Times (min) for Various Networks Under Medium Demand, Lower Desirability of Ridesharing

Price:	C = 0	C = 0.01	C = 0.05	C = 0.10	C = 0.50	C = 0.80	C = 999999
Network 0	12.95	12.95	12.95	12.95	12.95	12.95	12.95
Network 1	12.05	12.10	12.03	12.06	11.95	11.93	12.66
Network 2	12.61	11.70	11.67	11.72	11.72	11.72	12.24
Network 3	12.75	12.84	12.81	13.09	13.86	12.70	11.51
Network 4	12.00	12.02	12.03	11.99	12.12	12.13	12.81
Network 5	11.55	11.92	11.93	12.01	11.87	11.72	12.81
Network 6	12.76	11.68	11.72	11.73	11.73	11.73	11.56
Network 7	12.41	11.43	11.97	11.97	11.97	11.97	12.24
Network 8	12.42	12.17	11.84	11.87	12.24	12.17	11.51
Network 9	12.79	12.98	12.79	13.46	12.67	12.64	11.56

Table 5.10 Percent Difference in Average Trip Times from Network 0 under Medium Demand, Lower Desirability of Ridesharing

Price:	C = 0	C = 0.01	C = 0.05	C = 0.10	C = 0.50	C = 0.80	C = 999999
Network 1	6.92	6.57	7.11	6.85	7.76	7.91	2.22
Network 2	2.85	10.31	10.63	10.21	10.31	10.32	5.63
Network 3	1.58	0.90	1.21	-1.21	-7.80	2.11	11.74
Network 4	7.43	7.27	7.21	7.31	5.95	6.50	1.21
Network 5	11.71	8.55	8.49	7.82	8.91	10.14	1.09
Network 6	1.63	10.69	10.34	10.20	10.32	10.45	10.84
Network 7	4.26	12.99	8.40	8.40	8.40	8.40	6.17
Network 8	4.28	6.85	9.30	9.00	5.97	6.50	11.81
Network 9	1.30	-0.27	1.39	-4.27	2.27	2.52	12.10

Under the conditions of medium demand and lower attractiveness of carpooling, additional roadway capacity does not guarantee lower average trip times. Providing separate ramps to the additional lane (network 5) when no fee is charged leads to the lowest average travel time of the networks tested; this suggests that there may be congestion on the freeway ramps. The network that has the highest average trip time when no toll is assessed — a trip time that is still lower than that of the base network — is network 9. Network 9 has the most roadway capacity but a limited number of access points, implying that in this situation, more

access may need to be granted. Continuous access leads to the shortest average trip times under HOT conditions.

Table 5.11 provides the average trip times for the various networks when high demand is used and the characteristics of the traveler and travel mode make ridesharing less desirable. Table 5.12 shows the relative difference in average travel times of each network from network 0.

Table 5.11 Average Trip Times (min) for Various Networks Under High Demand, Lower Desirability of Ridesharing

Price:	C = 0	C = 0.01	C = 0.05	C = 0.10	C = 0.50	C = 0.80	C = 999999
Network 0	15.29	15.29	15.29	15.29	15.29	15.29	15.29
Network 1	12.93	13.07	13.36	13.10	13.70	13.77	13.80
Network 2	15.21	15.03	15.91	15.47	15.14	15.14	14.55
Network 3	15.14	14.20	14.86	14.95	14.07	14.70	17.26
Network 4	15.40	15.38	14.75	14.73	14.57	14.58	13.97
Network 5	15.34	15.20	15.19	15.19	14.90	15.16	13.91
Network 6	16.40	14.73	14.38	14.29	14.83	14.83	14.71
Network 7	15.03	14.72	14.05	14.09	14.10	14.10	14.59
Network 8	15.00	13.35	14.31	13.96	14.77	14.87	18.10
Network 9	15.47	14.17	15.29	13.75	14.02	15.35	17.26

Table 5.12 Percent Difference in Average Trip Times from Network 0 under High Demand, Lower Desirability of Ridesharing

Price:	C = 0	C = 0.01	C = 0.05	C = 0.10	C = 0.50	C = 0.80	C = 999999
Network 1	15.42	14.50	12.60	14.34	10.40	9.91	9.74
Network 2	0.60	1.99	-4.68	-1.43	1.04	1.04	5.36
Network 3	0.99	7.26	2.71	2.18	8.05	3.90	-13.56
Network 4	-0.75	-0.63	3.62	3.74	5.08	4.80	7.65
Network 5	-0.32	0.60	0.65	0.65	2.69	0.85	9.89
Network 6	-7.27	3.67	5.98	6.57	3.08	3.03	4.18
Network 7	1.54	3.86	8.63	8.36	8.04	8.04	4.73
Network 8	1.93	13.16	6.93	9.40	3.70	2.97	-19.28
Network 9	-1.19	8.38	-0.01	11.04	8.60	-0.45	-10.90

Network 1 performs the best of all the configurations for all pricing categories, including the no-cost and HOV-only scenarios. This suggests that the HOV volume at the endpoints is high enough that additional access points are not required to save time over the

base conditions. Adding lanes under this demand and carpooling attractiveness may actually produce longer average travel times than the base conditions (see table 5.12).

5.2 VEHICLE ELIGIBILITY

Three cases of vehicle eligibility were studied. In the first scenario, C=0, all vehicles were allowed to use all of the lanes for free. In the second case, C=0.01, 0.05, 0.10, 0.50, and 0.80, HOVs were granted free use of the road while SOVs were charged a toll. Finally, in C=999999, only HOVs were allowed to use the facility.

5.2.1 Low-Demand, Higher Ridesharing Desirability

Using Table 5.2, one can draw a comparison of vehicle eligibility for each network. For networks 2, 3, 6, 7, and 8, the longest average trip time was obtained when all vehicles were allowed to use all of the lanes for free. Since networks 6 and 7 are related to network 2, it is not surprising that the three should demonstrate similar results. Network 8 is related to network 3 in terms of access points, so these two should also reveal similar results when no fee is charged. However, network 9 is similar to networks 3 and 8 and does not have the highest travel times in the no-cost scenario. For network 9, the second-least amount of time savings is generated in the C=0 case, and the least is generated in the HOV-only case. Networks 3 and 8 have the least and second-least time savings scenarios switched from network 9.

The lowest trip times for networks 2, 4, 5, 6, and 7 were found in the third class of vehicle eligibility: HOV only. For the related networks 2, 6, and 7, this result suggests that the access/egress pattern works best when there are more restrictions placed on facility usage. Networks 4 and 5 are related to each other, and their design also works best for HOV-only facilities.

Networks 1, 3, 8, and 9 perform the best under pricing conditions. Since networks 3, 8, and 9 are related, they are anticipated to reveal similar results. All four of these designs have restricted access points that would allow for simple toll collection by electronic techniques.

5.2.2 Medium-Demand, Higher Ridesharing Desirability

Referencing Tables 5.3 and 5.4, one can observe the vehicle eligibility conditions that yield the least amount of trip time for each network under the medium demand, higher ridesharing desirability scenario.

Networks 4 and 5 perform at their best when all vehicles are granted access to all lanes for free. The worst performance of these two configurations occurs in the HOV-only situation. These two networks differ only in the number of northbound lanes provided and are expected to behave similarly. They provide ramps onto the facility that may bypass some congestion found at freeway entrances and exits.

Networks 3, 8, and 9 have their lowest average trip times in the HOV-only scenario. These networks provide at least as many miles of dedicated lanes as any other network configuration; in fact, network 9 provides the highest number of miles of HOV lanes. Since networks 3 and 8 have lower average trip times than network 9, the additional HOV lanes are not needed for system optimality.

Network 1 has its highest travel time in the HOV-only situation and its lowest under C=0.05. The lack of access points along the network may prevent many HOVs from using the facility. The relatively low price that leads to the lowest trip times indicates that there is sufficient overall demand to use the facility at both endpoints if the cost is low enough.

The highest number of access points is provided by networks 2, 6, and 7. All of these networks have their lowest time savings over network 0 when all vehicles are allowed to use all of the lanes for free. This is not surprising because the greatest number of people can use the facility with ease.

5.2.3 High-Demand, Higher Ridesharing Desirability

Only network 1 performed the best when all vehicles were allowed to use all of the lanes for free. This suggests that there are sufficient volumes generated by this demand at the endpoints to provide express service. Under the no-cost condition, networks 4, 5, 6, and 9 did not provide lower average trip times than network 0 (see Table 5.6) and should not be used without pricing of some kind. This would not necessarily be bad, however, since each of these networks would require construction of some kind.

Network 1 fared its worst under the HOV-only conditions, but it was still superior to the other networks in terms of average trip times. There may be additional capacity on the HOV lanes that could be "sold" to SOVs to further save time for the system.

Two other networks had their highest trip times in the HOV-only scenario. These configurations, 3 and 8, were related. The comparison of these networks to their other relative, network 9, suggests that there is sufficient HOV volume to warrant more dedicated lanes. Networks 3 and 8 could have experienced some bottlenecks along the HOV lanes in the middle section of the network, a situation that was relieved by the provision of additional HOV lanes in that section in network 9.

Networks 3, 8, and 9 experienced their lowest average travel times when SOVs were allowed to "buy into" the facility. These results imply that there is some extra capacity that can be "sold" to reduce travel times throughout the system as a whole.

Network 7 also had its greatest time savings over network 0 at a mixed-traffic scenario. This configuration, like network 9, provides additional HOT lanes in the middle section of the network. These two networks may allow for the avoidance of possible bottlenecks on the southbound HOT lanes. Both of these configurations had their smallest time savings when no fee was charged, suggesting that the unmanaged demand for the additional capacity would not be the optimal use of the space.

5.2.4 Low-Demand, Lower Ridesharing Desirability

When all lanes are open to all vehicles without restriction, networks 2, 3, 6, 7, and 8 experience their greatest average trip times (Table 5.7). This result was anticipated because no separation of traffic allows for a "free-for-all" situation in which bottlenecks may occur. Network 1 provides its greatest time savings in this situation, but since access is only granted at the endpoints, the "free-for-all" situation is avoided.

Under the HOT conditions, networks 1, 4, and 5 achieve their highest average trip times. These networks have limited access points, suggesting that there is not enough excess demand at the access locations for the lanes to be most beneficially used. On the other hand, networks 3, 8, and 9, which are all related, yielded their lowest average trip times when a minimal fee was charged. This suggests that there is excess capacity on these lanes that can be "sold" to make the overall trip times shorter.

If HOVs only were permitted on the special lanes, networks 2, 4, 5, 6, and 7 would perform at their best. The continuous access provided by networks 2, 6, and 7 allows any HOVs using the freeway to shift to the HOV lanes with ease. Networks 4 and 5 have their lowest trip times, suggesting that the HOVs may use the dedicated ramps to save additional time. They may not be able to use these ramps during the HOT conditions because there are too many SOVs already on the facility.

5.2.5 Medium-Demand, Lower Ridesharing Desirability

The networks that have their highest average trip times when the lanes are available to all vehicles for free are networks 2, 6, 7, and 8. The first three configurations mentioned allow continuous access and the potential for the most vehicles to enter the designated lanes. The lowest average trip time for network 5 occurs when all vehicles are allowed to use the facility.

When pricing is used, networks 1, 2, 4, and 7 achieve their best results. On the other hand, network 3 has its highest average trip time when pricing is used.

The HOV restriction proves to be the worst case of vehicle eligibility for networks 1, 4, and 5; however, all of these configurations have lower average trip times than the base conditions. The lowest trip times are achieved for networks 3, 6, 8, and 9 when only HOVs are permitted on the facility.

5.2.6 High-Demand, Lower Ridesharing Desirability

Since network 1 outperforms the other eight HOV/HOT configurations, there must be sufficient HOV volumes at each end to warrant the use of only the two access points. Network 1 achieves its best results when all vehicles are allowed to use the facility for free. This is the only configuration where that is the case.

Overuse of the HOV/HOT facility by SOVs may occur in networks 2, 4, and 9, which, under some prices, have longer average trip times than network 0. The longest average travel times for networks 4, 5, 6, and 7 occur when all vehicles are eligible to use the lanes.

The most beneficial uses of networks 3, 6, 7, 8, and 9 occur under a pricing condition. A combination of vehicle eligibilities works best for these networks with high demand and lower carpooling attractiveness.

When the special lanes are HOV-only, networks 2, 4, and 5 achieve their lowest average trip times. This is the opposite of the results for networks 3, 8, and 9.

5.3 DEMAND

The total number of vehicles generated has little effect on the percentages of SOVs and HOVs that have the special lanes in their travel paths and are using the HOT facility. An example is provided in Tables 5.13 and 5.14. As anticipated, the average travel time increases with the total demand.

Table 5.13 Percentages of SOVs Using the HOT Facility

	Low Demand	Medium Demand	High Demand
Network 1	17.11	20.42	20.70
Network 2	35.55	40.38	50.98
Network 3	27.17	33.79	28.59
Network 4	8.75	10.73	10.78
Network 5	7.15	6.51	7.98
Network 6	35.95	40.50	47.25
Network 7	40.24	40.02	52.04
Network 8	29.58	34.62	27.83
Network 9	31.29	37.59	33.10

Table 5.14 Percentages of HOVs Using the HOT Facility

	Low Demand	Medium Demand	High Demand
Network 1	24.55	21.84	21.21
Network 2	60.10	61.07	61.27
Network 3	41.42	38.49	41.99
Network 4	21.91	18.22	23.25
Network 5	19.85	16.68	19.28
Network 6	58.91	62.06	62.04
Network 7	60.03	61.93	62.37
Network 8	39.71	37.67	37.72
Network 9	43.64	40.01	45.49

5.4 PRICING

The fees charged can have a large impact on the types of vehicles using the HOT lanes. The higher the charge, the lower the number of SOVs using the roadway. The additional space on the facility, abandoned by the SOVs, is now available for HOV usage; therefore, as the price increases, SOV usage should decrease while HOV usage should increase. This is indeed the case for low-demand with higher desirability of ridesharing, seen in Tables 5.15 and 5.16 and a representative graph in Figure 5.1. The other five scenarios of medium-demand and high-demand with higher desirability of ridesharing; and low, medium, and high-demand with lower desirability of ridesharing; demonstrate trends similar to those in the previously mentioned scenario.

Table 5.15 Percentages of HOVs That Use the HOV/HOT Facility That Have the Facility As a Path Option (low-demand, higher ridesharing desirability)

Price:	C = 0	C = 0.01	C = 0.05	C = 0.10	C = 0.50	C = 0.80	C = 999999
Network 1	23.02	24.55	24.72	24.72	24.96	24.96	32.24
Network 2	55.39	60.10	60.60	60.69	60.69	60.69	63.46
Network 3	36.26	41.42	42.84	43.89	44.19	44.19	54.75
Network 4	20.36	21.91	22.06	22.06	21.97	21.97	25.80
Network 5	15.29	19.85	19.91	19.91	19.91	19.91	25.80
Network 6	55.87	58.91	60.50	60.53	60.53	60.53	62.40
Network 7	55.22	60.03	61.65	61.65	61.65	61.65	63.23
Network 8	38.12	39.71	44.08	44.38	44.38	44.38	55.27
Network 9	40.02	43.64	46.00	47.23	46.94	46.98	54.97

Table 5.16 Percentages of SOVs That Use the HOV/HOT Facility That Have the Facility As a Path Option (low-demand, higher ridesharing desirability)

Price:	C = 0	C = 0.01	C = 0.05	C = 0.10	C = 0.50	C = 0.80
Network 1	21.90	17.11	11.90	8.34	5.18	5.18
Network 2	55.46	35.55	34.65	35.47	35.47	35.47
Network 3	36.31	27.17	19.81	15.53	9.99	9.99
Network 4	17.97	8.75	3.04	3.04	3.08	3.04
Network 5	14.72	7.15	3.04	3.04	3.06	3.02
Network 6	56.18	35.95	34.53	34.54	34.54	34.54
Network 7	56.74	40.24	33.12	33.13	33.13	33.13
Network 8	37.51	29.58	16.62	11.07	10.54	10.54
Network 9	38.97	31.29	22.75	16.44	7.31	6.90

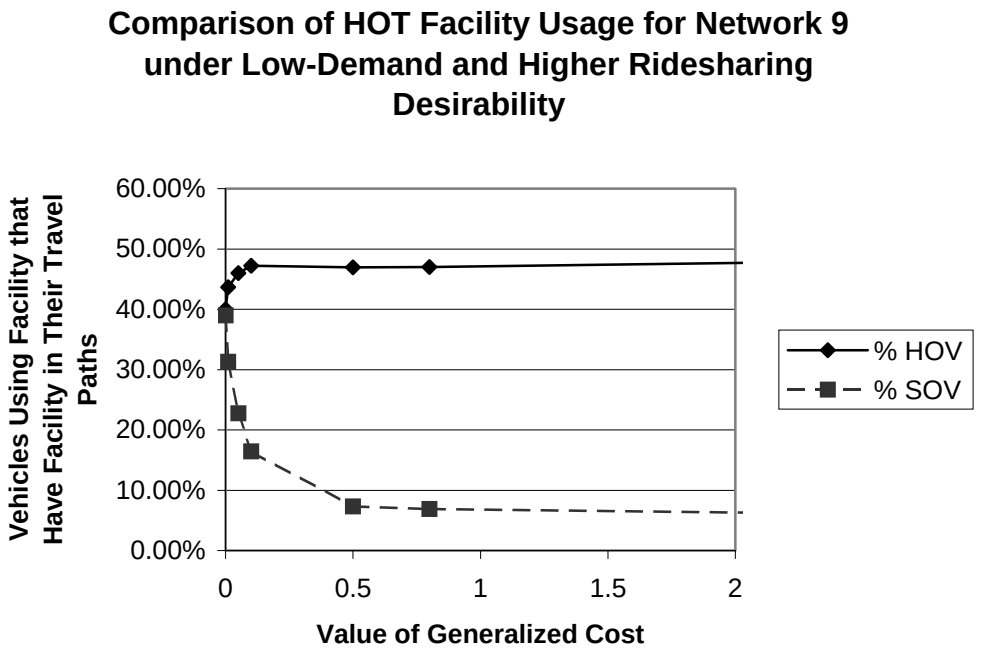

Figure 5.1 Facility Usage by HOVs and SOVs That Have an HOT Facility in Their Travel Paths

Pricing can have an important impact on the average speeds present along a freeway. Figures 5.2 and 5.3 show two examples of the average speeds found on network 1 in the northbound lane.

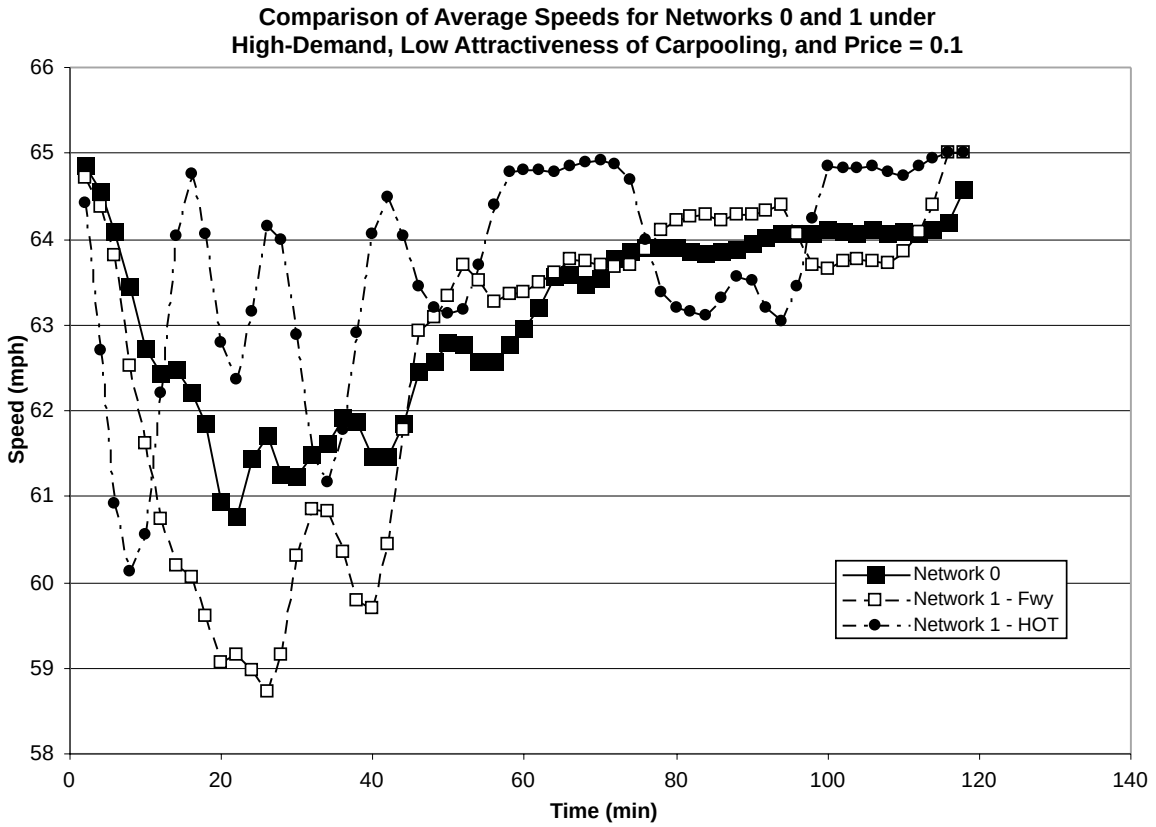

Figure 5.2 Comparison of Average Speeds for the Northbound Direction for Medium Pricing

As can be seen from Figure 5.2, except for the initial 15 minutes, either the three main freeway lanes of network 1 or the HOT lane will operate at higher speeds than the four freeway lanes of network 0. An important observation is that the HOT lane typically operates at a higher speed than the general purpose lanes of network 1; this is important because special facilities must offer improved conditions to be successful. This would be even more significant if the demand were higher, resulting in greater congestion and lower speeds on the freeway. The above observations are mirrored by Figure 5.3.

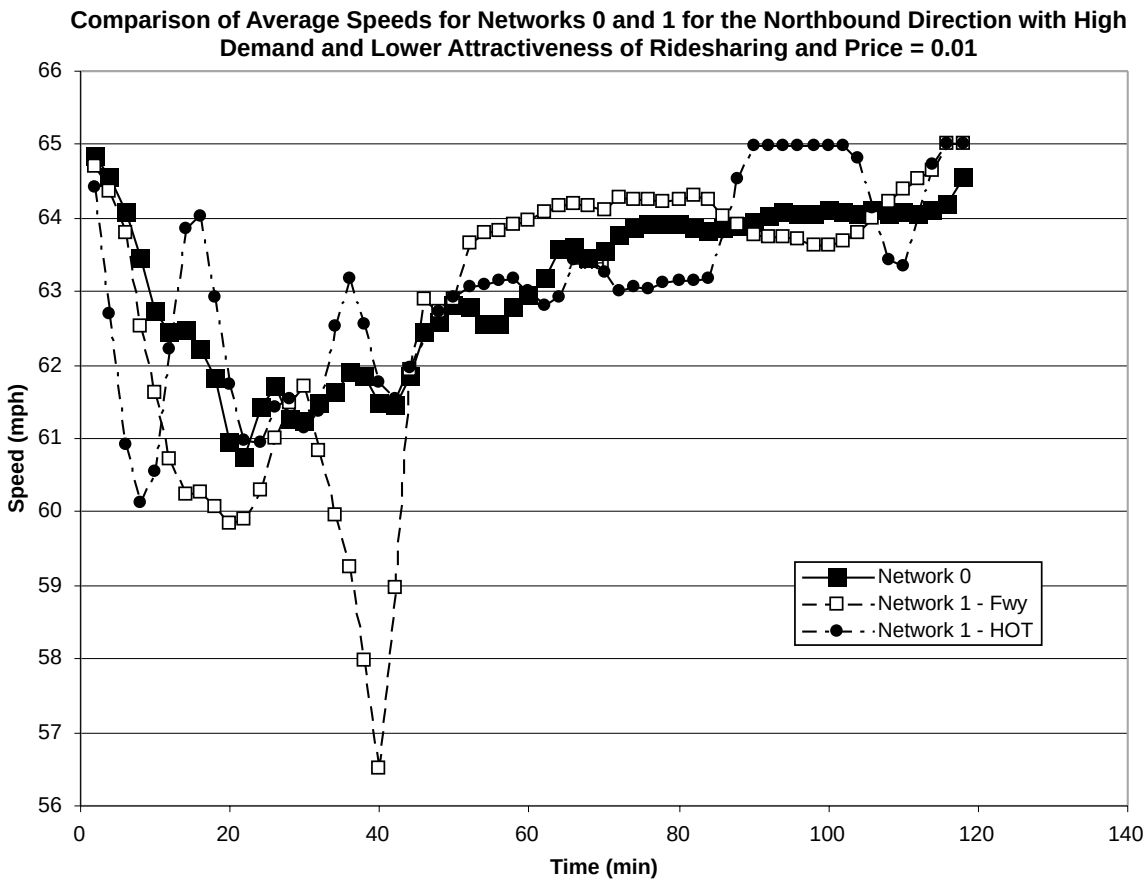

Figure 5.3 Comparison of Average Speeds for the Northbound Direction under Low Pricing

A comparison of Figures 5.2 and 5.3 suggests that the higher pricing leads to a smoother evolution of average freeway speeds for network 1.

5.5 UTILITY FUNCTION

The constant for the shared ride mode (bsr) was allowed to take on two values in this experiment. The original value was -2.169, and the other value was -1.5, as discussed in Chapter 4. The negative values indicate that for all contributing characteristics of the traveler and mode, except for the sensitivity to generalized cost, the drive-alone mode is preferred to carpooling. The –1.5 indicates a greater affinity for the shared ride mode than the –2.169. The coefficient for generalized cost was not altered.

This variation in the utility function allowed for different average trip times for all of the networks, with the exception of network 0. These results for the low demand are presented in Table 5.17. As seen in the table, neither value of the constant provides a lower average trip time for all networks.

Table 5.17 Comparison of Average Trip Times for Two Utility Function Constants for the Low Demand Level

	Value of Constant	Price						
		C = 0	C = 0.01	C = 0.05	C = 0.10	C = 0.50	C = 0.80	C = 999999
Network 1	-2.169	9.96	10.58	10.08	10.04	10.01	10.04	10.26
	-1.5	9.96	10.38	10.01	10.04	9.92	9.92	10.09
Network 2	-2.169	11.87	10.50	10.51	10.51	10.51	10.51	10.12
	-1.5	11.87	10.37	10.30	10.29	10.29	10.29	10.34
Network 3	-2.169	10.64	9.47	9.52	9.61	9.69	9.69	9.96
	-1.5	10.64	9.89	9.87	9.86	9.95	9.95	10.36
Network 4	-2.169	10.91	10.90	10.90	10.93	10.90	10.90	10.43
	-1.5	10.91	10.81	10.98	10.98	10.84	10.84	10.72
Network 5	-2.169	10.95	10.99	11.02	11.00	11.02	11.01	10.43
	-1.5	10.95	10.99	10.99	10.99	11.03	11.03	10.74
Network 6	-2.169	10.99	10.53	10.64	10.64	10.64	10.64	10.01
	-1.5	10.99	10.70	10.81	10.81	10.81	10.81	10.38
Network 7	-2.169	11.23	10.29	10.32	10.35	10.34	10.34	10.10
	-1.5	11.23	10.56	10.28	10.28	10.28	10.28	10.36
Network 8	-2.169	10.57	9.55	9.95	9.99	9.99	9.99	10.05
	-1.5	10.57	9.85	9.70	9.70	9.70	9.70	10.54
Network 9	-2.169	10.41	9.50	9.58	9.76	9.99	9.98	10.45
	-1.5	10.41	9.66	9.52	9.58	9.62	9.65	10.38

5.6 CHAPTER SUMMARY

This chapter has presented the results of the computer simulation experiments. The data were analyzed in terms of lane configuration and access points, vehicle eligibility, demand, pricing, and the utility function. The conclusions that can be gained from these results are presented in Chapter 6.

CHAPTER 6. CONCLUSIONS

This chapter summarizes conclusions drawn from the computer simulation experiments. Directions for expanding the experimentation are given below, along with further suggestions for better evaluation of the HOV/HOT experience.

6.1 CONCLUSIONS FROM COMPUTER SIMULATION EXPERIMENTATION

Several conclusions can be drawn from the DYNASMART simulation experiments regarding high-occupancy vehicle (HOV) and high-occupancy vehicle/toll (HOT) facilities. The first important realization is that there is no single lane and access point configuration that will perform the best under all conditions.

Table 6.1 provides a summary of the network and pricing treatments that were successful for the experimental scenarios. Under low demand, almost any configuration will provide shorter average trip times. Smaller numbers of access points tend to be more beneficial to the system than continuous access is. In the low demand case, the provision of additional roadway capacity always resulted in improved performance in the network consideration. This is not true, however, for higher demand levels. When the volumes are higher, the traffic must be managed. One strategy for guiding traffic involves charging a fee to low-occupancy vehicles. To collect this toll, electronic toll collectors will have to be placed at entrance and exit points. The number of points at which the vehicles may access or exit the facility will determine the number of collectors needed. The access point configuration could also act as a management tool. If the facility is not convenient for certain trips, people will not use it for that specific purpose.

Table 6.1 Summary of Successful Strategies for Various Scenarios

Scenario Description	Access Points	Add Capacity	Pricing	HOV only
Low demand, higher ride sharing attractiveness	Any	Okay for either HOV or HOT	Any	Yes
Medium demand, higher ride sharing attractiveness	Endpoints only or same as freeway	Okay for HOV only, not if pricing	Any	Yes
High demand, higher ride sharing attractiveness	Endpoints only	No	Any	Yes
Low demand, lower ride sharing attractiveness	Any	Okay for either HOV or HOT	Any	Yes
Medium demand, lower ride sharing attractiveness	Endpoints only or same as freeway	Okay for either HOV or HOT	Any	Yes
High demand, lower ride sharing attractiveness	Endpoints only	No	Any	Yes

The demand structures used here prevented certain types of HOV/HOT facilities from being successful. There was not a sufficient directional split to allow contraflow facilities to be considered. The reversible facilities, simulated by networks 4 and 5, did not reduce the average trip times by as great an increment as other configurations did.

Direct access ramps, provided in networks 4 and 5, allow HOT lane users to avoid merging from the freeway main lanes. These ramps also allow users to bypass the freeway ramps, which may become congested.

Whether a traveler uses the special lanes depends on the utility he or she associates with it. The characteristics of the person, along with the qualities of the travel mode play an important role in determining the mode and route splits. One of the most important aspects is the traveler's sensitivity to time and cost. Cost, in terms of fees assessed, is simple to determine, but the individual's value of time is impossible to determine instantaneously. Other characteristics were grouped together in a constant for this experiment. Increasing the attractiveness of the shared-ride mode did not always guarantee a lower average travel time. The pricing scheme and network configuration also had an influence on the average trip time.

6.2 RECOMMENDATIONS FOR FUTURE STUDY

This section describes potential areas for future study. The first part focuses on further experimentation that could be performed. The second section discusses advances that could be made in determining the effectiveness of special-use lanes.

6.2.1 Experimentation

Several additional aspects of high-occupancy vehicle/toll facilities could benefit from further investigation. To expand the experimentation performed for this report, different demand and mode split formulations should be created. Furthermore, alternative pricing strategies should be studied, such as those based on a timetable as is currently employed in San Diego.

In terms of demand, a case with a high directional split should be developed. Once this has been achieved, networks involving reversible and contraflow HOT facilities can be examined. In addition to creating a scenario with directional split, cases with higher demand in general should be considered. The increased demand should make the HOV and HOT lanes more desirable.

An important aspect to the overall demand is the mode split. In the research performed here, the constant, which incorporates all aspects of the traveler and mode except sensitivity to generalized cost, was altered to make ride sharing more desirable. For future study, the sensitivity to time and cost should be varied. Another aspect of mode split that should be investigated is the use of transit. This capability was made available in DYNASMART in November 1999.

Once the variables mentioned in the previous two paragraphs have been investigated, the pricing strategy becomes more important. A distance-based toll could be charged instead of a congestion-based toll, which was studied here. Another strategy that should be considered is the charging of a flat toll, where the charge is the same regardless of the length of the trip made on the HOT facility or the congestion present.

One important aspect that was not studied here is the provision of real-time information; for instance, what the current charge for using the HOT facility is. The ability

of travelers to make the decision whether to use the HOT lanes while en route should be modeled. This capability is available in DYNASMART.

Networks based on those in other cities would provide an excellent extension of this study. Similar experiments could be conducted, including ones incorporating the above suggestions. Comparing the simulation results of the networks to field data would also be an important step.

6.2.2 Determining Effectiveness of Special Lane Facilities

A vast amount of the literature available appears to be focused on evaluating HOV facilities in a positive manner. The studies appear to be generally lacking in rigor in certain aspects, and some of the results appear infeasible. For instance, the benefit-cost ratio of 78 for the Katy Freeway HOV lanes seems excessive.

Although there has been some effort to accumulate information on special lanes from around the country, there is not a complete summary available. The provision of such material would make decisions relating to special lanes easier to present to the public. Information on traveler behavior and characteristics, the political situation, land use, and congestion levels should be acquired in addition to safety and construction information.

BIBLIOGRAPHY

Abdelghany et al. (1999). *Using Dynamic Traffic Assignment in the Design and Evaluation of High Occupancy Toll Lanes*. Draft submitted for publication at the 79th Annual Meeting of the Transportation Research Board. Washington, D.C.

Acha-Daza, J. (1998). *The User's Response to Pricing in a Traffic Network*. Dissertation. The University of Texas at Austin.

Acha-Daza, J., Moore, R., and Mahmassani, H. S. (1995). *Assessment of Congestion Pricing for Reducing Urban Congestion and Improving Air Quality*. Research Report 1321-1F. Center for Transportation Research. Austin, Texas.

Ben-Akiva, M., and Lerman, S. R. (1985). *Discrete Choice Analysis: Theory and Application to Travel Demand*. Cambridge, Mass.: MIT Press.

BMI et al. (1999). *I-95/I-395 HOV Restriction Study*. Vol. 1. Prepared for the Virginia Department of Transportation, Transportation Planning Division.

Bonaccorsi, P. F. (1996). "HOV Fix on I-66." *Civil Engineering*. July, pp. 64–66.

Bracewell, D., et al. (1999). *High Occupancy Vehicle Monitoring and Evaluation Framework*. 78th Annual Meeting of the Transportation Research Board. The University of British Columbia, Vancouver, B.C., Canada.

Cervero, R. (1999). "Reviving HOV Lanes." *Transportation Quarterly*. Vol. 53, No. 4, pp.67–81.

Chang, G. L., Mahmassani, H. S., and Herman, R. (1985). "A Macroparticle Traffic Simulation Model to Investigate Peak-Period Commuter Decision Dynamics." *Transportation Research Record* 1007, pp. 107–120.

Fielding, G. J. (1994). "Private Toll Roads: Acceptability of Congestion Pricing in Southern California." *Curbing Gridlock: Peak Period Fees to Relieve Traffic Congestion.* Vol. 2. Washington, D.C.: National Academy Press.

Giuliano, G. (1994). "Equity and Fairness Considerations of Congestion Pricing." *Curbing Gridlock: Peak-Period Fees to Relieve Traffic Congestion*. Vol. 2. Washington, D.C.: National Academy Press.

Godbe Research & Analysis (1997). *I-15 ExpressPass Focus Groups Conducted for the San Diego Association of Governments*. July.

Godbe Research & Analysis (1998). *Focus Group Research for I-15 Commuters*. August.

Golob, J. (1998). *I-15 Congestion Pricing Project Monitoring and Evaluation Services: Task 3.3.7Phase 1 Acceptance of the Project and the Pricing Concept*. Prepared for San Diego Association of Governments. July 30.

Golob, J., Supernak, J., Golob, T., and von Dienes-Oehm, Z. (1998). *I-15 Congestion Pricing Project Monitoring and Evaluation Services: Task 3.2.4 Phase 1 Business Impact Study*. Prepared for San Diego Association of Governments. March 30.

Goodman, L., et al. (1998). "High-Occupancy/Toll (HOT) Lanes and Value Pricing: A Preliminary Assessment." *ITE Journal*. June, pp. 30–40.

Harvey, G. W. (1994). "Transportation Pricing and Travel Behavior." *Curbing Gridlock: Peak-Period Fees to Relieve Traffic Congestion*. Vol. 2. Washington, D.C.: National Academy Press.

Hultgren, L., and Kawada, K. (1999). "San Diego's Interstate 15 High-Occupancy/ Toll Lane Facility Using Value Pricing." *ITE Journal*. June, pp. 22–27.

I-15 FasTrak Online (1999). http://www.sandag.cog.ca.us/data_services/fastrak/location.html.

Jayakrishnan, R., Mahmassani, H. S., and Hu, T. Y. (1994). "An Evaluation Tool for Advanced Traffic Information and Management Systems in Urban Networks." *Transportation Research*. Vol. 2., No. 3. pp. 129–147.

Kain, J. (1994). "Impacts of Congestion Pricing on Transit and Carpool Demand and Supply." *Curbing Gridlock: Peak-Period Fees to Relieve Traffic Congestion*. Vol. 2. Washington, D.C.: National Academy Press.

Kazimi, C., Supernak, J., and Koesoemawiria, A. (1998a). *I-15 Congestion Pricing Project Monitoring and Evaluation Services: Task 3.1.12 Phase 1 Cost of Delay Study*. Prepared for San Diego Association of Governments. November 30.

Kazimi, C., Supernak, J., and Koesoemawiria, A. (1998b). *I-15 Congestion Pricing Project Monitoring and Evaluation Services: Task 3.1.13 Phase 1 Air Quality Study*. Prepared for San Diego Association of Governments. August 10.

MassHighway home page (1999). http://www.state.ma.us/mhd/hov. July 8.

Parkany, E. (1999). *Can HOT Lanes Encourage Carpooling? A Case Study of Carpooling on the 91 Express Lanes*. 78th Annual Meeting of the Transportation Research Board. Washington, D.C.

Peeta, S. (1994). *System Optimal Dynamic Traffic Assignment in Congested Networks with Advanced Information Systems*. Dissertation. The University of Texas at Austin.

Poole, R. W., Jr. (1992). "Introducing Congestion Pricing on a New Toll Road." *Transportation*. Vol. 19, No. 4, pp. 383–396.

Rogers, C. A. (1985). "Effects of Ramp Metering with HOV Bypass Lanes on Vehicle Occupancy." *Transportation Research Record* 1021.

Schreffler, E. N. (1998). *I-15 Congestion Pricing Project Monitoring and Evaluation Services: Task 3.3.2 Phase 1 Enforcement Effectiveness and Violation Assessment.* Prepared for San Diego Association of Governments. July 23.

Schreffler, E. N., Golob, J., and Supernak, J. (1998). *I-15 Congestion Pricing Project Monitoring and Evaluation Services: Task 3.3.1 Phase 1 Implementation Procedures, Policies, Agreements and Barriers.* Prepared for San Diego Association of Governments. May 6.

Shin, S. W., and Hickman, M. (1999). *The Effectiveness of the Katy Freeway HOV Lane Pricing Project: A Preliminary Assessment.* 78th Annual Meeting of the Transportation Research Board. Washington, D.C.

Small, K. A. (1992). *Urban Transportation Economics*. United States: Harwood Academic Publishers.

Smith, L. (1999). *QuickRide Status Report.* METRO. Houston, Texas.

Stockton, B., et al. (1997). *An Evaluation of High-Occupancy Vehicle Lanes in Texas*, Research Report 1353-5. Texas Transportation Institute. College Station, Texas.

Supernak, J., et al. (1998a). *I-15 Congestion Pricing Project Monitoring and Evaluation Services: Task 3.1.10 Phase 1 Park and Ride Lot Study*. Prepared for San Diego Association of Governments. August 18.

Supernak, J., et al. (1998b). *I-15 Congestion Pricing Project Monitoring and Evaluation Services: Task 3.3.3 Phase 1 Safety Related Issues*. Prepared for San Diego Association of Governments. July 29.

Supernak, J., et al. (1999a). *I-15 Congestion Pricing Project Monitoring and Evaluation Services: Task 3 Phase II Year 2 Park and Ride Lot Study*. Prepared for San Diego Association of Governments. April 27.

Supernak, J., et al. (1999b). *I-15 Congestion Pricing Project Monitoring and Evaluation Services: Task 4 Phase II Year 2 Land Use Study*. Prepared for San Diego Association of Governments. April 19.

Supernak, J., Guzik, G., and Golob, J. (1998). *I-15 Congestion Pricing Project Monitoring and Evaluation Services: Task 3.1.11 Land Use Study Methodology*. Prepared for San Diego Association of Governments. March 30.

Supernak, J., and Kaschade, C. (1998). *I-15 Congestion Pricing Project Monitoring and Evaluation Services: Task 3.3.8 Phase 1 Technical Performance of the Interim Electronic Toll Collection System.* Prepared for San Diego Association of Governments. August 19.

Supernak, J., and Kaschade, C. (1999). *I-15 Congestion Pricing Project Monitoring and Evaluation Services: Task 11 Phase II Year Two Enforcement Effectiveness and Violation Assessment.* Prepared for San Diego Association of Governments. May 25.

Supernak, J., Kaschade, C., and Kelley, S. (1998). *I-15 Congestion Pricing Project Monitoring and Evaluation Services: Task 3.3.6 Media Relations and Coverage.* Prepared for San Diego Association of Governments. July 23.

Supernak, J., Kaschade, C., and Koesoemawiria, A. (1998). *I-15 Congestion Pricing Project Monitoring and Evaluation Services: Task 3.1.8 Phase 1 Truck Use Study*. Prepared for San Diego Association of Governments. July 29.

Supernak, J., and Syed, I. (1998). *I-15 Congestion Pricing Project Monitoring and Evaluation Services: Task 3.1.9 Phase 1 Bus Study*. Prepared for San Diego Association of Governments. April 22.

Texas Transportation Institute, Parsons Brinckerhoff Quade and Douglas, Inc., and Pacific Rim Resources, Inc. (1998). *HOV Systems Manual. National Cooperative High Research Program Report 414.*

Turnbull, K. F. (1992a). *High-Occupancy Vehicle Project Case Studies: Historical Trends and Project Experiences*. Technical Report 925-4. Texas Transportation Institute. College Station, Texas.

Turnbull, K. F. (1992b). *An Assessment of High-Occupancy Vehicle Facilities in North America: Executive Report.* Technical Report 925-5F. Texas Transportation Institute. College Station, Texas.

Turnbull, K. F., and Christiansen, D. (1992). "HOV Lessons." *Civil Engineering*. September, pp. 74–75.

Turnbull, K. F., and Hanks, J. W., Jr. (1990). *A Description of High-Occupancy Vehicle Facilities in North America.* Technical Report 925-1. Texas Transportation Institute. College Station, Texas.

Turnbull, K. F., Henk, R. H., and Christiansen, D. L (1991). *Suggested Procedures for Evaluating the Effectiveness of Freeway HOV Facilities*. Technical Report 925-2. Texas Transportation Institute. College Station, Texas.

Verhoef, E. T., et al. (1996). "Information Provision, Flat and Fine Congestion Tolling and the Efficiency of Road Usage." *Regional Science and Urban Economics*. Vol. 26, No. 5, pp. 505–529.

Walton, C. M., Souleyrette, R. R., and Mahmassani, H. S. (1986). "Tolling Concepts in Highway Financing: Texas Experience." *Innovative Financing for Transportation: Practical Solutions and Experiences.* Prepared for Office of the Secretary of Transportation. DOT 1-86-20.

Wilbur Smith Associates (1996). *I-15 Congestion Pricing Project: Task 1-B Interim Implementation Operations Plan.* Prepared for San Diego Association of Governments. November 19.

Wilbur Smith Associates (1997). *I-15 Congestion Pricing Project: Task 1-A Project Concept Plan – B Full Operations Implementation.* Prepared for San Diego Association of Governments. February 10.

Wilbur Smith Associates (1997). *Task 2-B: Roadway Operations and Traffic Conditions Baseline Travel Data and Analysis Pre-Project Baseline Data Set*.

Wu, D., and Chen, J. X. (1999). *High Occupancy Vehicle Facilities Development and Evaluation in Los Angeles County*. 78th Annual Meeting of the Transportation Research Board. Los Angeles County Metropolitan Transportation Authority. Los Angeles, Calif.

Ziliaskopoulos, A. (1992). *Design and Implementation of Some k-Shortest Path Algorithms with Application to Intelligent Vehicle/Highway Systems*. Masters Report. The University of Texas at Austin.